VIDE-V27608

Service Manual

ViewSonic VG181

Model No. VLCDS21594-1

18" Color TFT LCD Display

VG181_SM_104 - Rev. 1 – September 2001

ViewSonic® 381 Brea Canyon Road, Walnut, California 91789 USA - (800) 888-8583

Copyright

Copyright © 1998 by ViewSonic Corporation. All rights reserved. No part of this publication may be reproduced, transmitted, transcribed, stored in a retrieval system, or translated into any language or computer language, in any form or by any means, electronic, mechanical, magnetic, optical, chemical, manual or otherwise, without the prior written permission of ViewSonic Corporation.

Disclaimer

ViewSonic makes no representations or warranties, either expressed or implied, with respect to the contents hereof and specifically disclaims any warranty of merchantability or fitness for any particular purpose. Further, ViewSonic reserves the right to revise this publication and to make changes from time to time in the contents hereof without obligation of ViewSonic to notify any person of such revision or changes.

Trademarks

ViewSonic is a registered trademark of ViewSonic Corporation.
All other trademarks used within this document are the property of their respective owners.

Revision History

Revision	Date	Description Of Changes	Approval
1.0	9/15/00	Initial Issue – DCN683	T. Sears

TABLE OF CONTENTS

PRECAUTIONS AND SAFETY NOTICES 2

FEATURES 3

SPECIFICATIONS 4

ON SCREEN DISPLAY 5

FACTORY PRESET TIMINGS 6

PIN ASSIGNMENTS ..... 7~8

MAIN BOARD I/O CONNECTIONS 9

THEORY OF OPERATION ..... 10~32

WAVEFORMS ..... 33~39

TROUBLESHOOTING GUIDE ..... 40~44

SPARE PARTS LIST 45

COMPLETE PARTS LIST ..... 46~62

SCHEMATIC DIAGRAMS ..... 63~69

EXPLODED VIEW AND PARTS LIST 70

Copyright © VIEWSONIC CORPORATION, 2000 All Rights Reserved.

IBM and IBM products are registered trademarks of International Business Machines Corporation.

Macintosh and Power Macintosh are registered trademarks of Apple Computer, Inc.

ViewPanel, ViewSonic, the three birds logo, OnView, ViewMatch, and ViewMeter are registered trademarks of ViewSonic Corporation.

VESA is registered trademarks of Video Electronics Standards Association. DPMS and DDC are trademarks of VESA.

Energy Star is a registered trademark of the US Environmental Protection Agency (EPA).

Disclaimer : ViewSonic Corporation shall not be liable for technical or editorial errors or omissions contained herein ; nor for incidental or consequential damages resulting from furnishing this material, or the performance or use this product.

In the interest of continuing product improvement, ViewSonic Corporation reserves the right to change product specification without notice. Information in this document may change without notice.

No part of this document may be copied, reproduced or transmitted by any means for any purpose without prior written permission from ViewSonic Corporation.

FCC INFORMATION
This equipment has been tested and found to comply with the limits of a Class B digital device, pursuant to part 15 of the FCC Rules. These limits are designed to provide reasonable protection against harmful interference in a residential installation. This equipment generates, uses and can radiate radio frequency energy, and if not installed and used in accordance with the instructions, may cause harmful interference to radio communications. However, there is no guarantee that the interference will not occur in a particular installation. If this equipment does cause unacceptable interference to radio or television reception, which can be determined by turning the equipment off and on, the user is encouraged to try to correct the interference by one or more of the following measures -- reorient or relocate the receiving antenna; increase the separation between equipment and receiver; or connect the into an outlet on a circuit different from that to which the receiver is connected.

FCC WARNING
To assure continued FCC compliance, the user must use a grounded power supply cord and the provided shielded video interface cable with bonded ferrite cores. Also, any unauthorized changes or modifications to Amtrak products will void the user's authority to operate this device. Thus ViewSonic Corporation will not be held responsible for the product and its safety.

CE CERTIFICATION
This device complies with the requirements of the EEC directive 89/336/EEC with regard to "Electromagnetic compatibility."

SAFETY CAUTION
Use a power cable that is properly grounded. Always use the AC cords as follows – USA (UL); Canada (CSA); Germany (VDE); Switzerland (SEV); Britain (BASEC/BS); Japan (Electric Appliance Control Act); or an AC cord that meets the local safety standards.

FEATURES

The VG181 is a world class TFT LCD display that includes the following features.

1. Digital On Screen Display Controls
   User friendly buttons [1], Select (▼/ ▲) [2], Power] allowing for picture perfect quality. Users can define display modes or reset to default settings. The main menu contains : Contrast / Brightness ; Image Adjust ; Viewmach Color; Advanced Menu ; Setup Menu ; Memory Recall and Exit.

2. Power Supply Support
   The separate AC adapter accepts voltages from 90~264 Vac (Universal), allowing for a full range of input AC sources.

3. Power Saving System
   This environmental friendly product can reduce power consumption by more than 95% in the Active Off mode.

4. Frequency Range
   The display can support video standards from VGA to SXGA, with a Horizontal frequency range from 30~82kHz and a Vertical frequency range from 50~75 Hz.

Confidential - Do Not Copy

SPECIFICATIONS

Characteristic	Description
LCD Panel	18.1 inch diagonal viewable screen, Anti-glare TFT Active Matrix Panel, 0.2805mm pixel pitch
Maximum Viewing Angles	Horizontal 160°CR>10 Vertical 160°CR>10
Signal Input	Video : RGB analog, 0.7/1.0 Vp-p, 75 ohms Composite Sync, Separate Sync, Sync On Green, f_h: 30-82 kHz, f_v: 50-75 Hz
Connector	Analog : 15 Pin Mini D-Sub Digital : 24 Pin DVI_D
Maximum Resolution	1280x1024
Video Bandwidth	135 MHz nominal
Display Area	359.00 mm (H) x 287.2 mm (V)
Power Voltage	90~264Vac @ 50/60 Hz (auto switch), 12Vdc 6A
Power Consumption	70 W max.
Operating Conditions	Temperature : 32 to 104 (0 to 40) Humidity : 10% to 90% (no condensation) Altitude : To 10,000 feet
Storage Conditions	Temperature : -4 to +140 (-20 to +60) Humidity : 10% to 90% (no condensation) Altitude : To 40,000 feet
Dimensions	Physical : 460mm (W) x 458.8mm (H) x 240mm (D)
Weight	10.0 kgs

Confidential - Do Not Copy

ON SCREEN DISPLAY

The OSD (On Screen Display) function is supported and controlled by four easy to use buttons –[1], Select , Select , [2], Power.

Menu	Sub-Function	Value
Contrast/ Brightness		
	Contrast	
	Brightness	
Image Adjust	Auto Tune	
	H./V. Position	
	H. Size	
	Phase	
	Zoom	
Viewmatch Color	Color Temp Select	
	User Color	
Advanced Menu	Scaling	
	Sharpness	
	ViewMeter	
Set Menu	Input Select	
	Language Select	
	OSD Position	
	OSD Timeout	

Confidential - Do Not Copy

FACTORY PRESET TIMINGS

These timings are preset for the analog & digital inputs.

Timing	Horizontal Polarity	Horizontal Frequency	Vertical Polarity	Vertical Frequency
VGA 640x350	+	31.47 kHz	-	70.09 Hz
VGA 720x400	-	31.47	+	70.08
VGA 640x400	-	31.47	+	70.09
VGA 640x480	-	31.47	-	59.94
VESA 640x480	-	37.86	-	72.81
VESA 640x480	-	37.50	-	75.00
MAC 640x480	Composite	35.00	-	66.67
VESA 800x600	+	35.15	+	56.25
VESA 800x600	+	37.88	+	60.32
VESA 800x600	+	48.08	+	72.19
VESA 800x600	+	46.88	+	75.00
MAC 832x624	-	49.72	-	74.55
VESA 1024x768	-	48.36	-	60.00
VESA 1024x768	-	56.48	-	70.07
VESA 1024x768	-	58.04	-	71.92
VESA 1024x768	+	60.02	+	75.03
MAC 1024x768	Composite	60.24	-	74.92
VESA 1280x1024	-	68.981	-	60.02
VESA 1280x1024	+	79.98	+	75.03
VESA 1152x864	+	67.50	+	75.00
VESA 1280x960	+	60.00	+	60.00

Confidential - Do Not Copy

PIN ASSIGNMENT

The analog input uses a 15 Pin Mini D-Sub connector.

Pin	Description
1	Red
2	Green
3	Blue
4	Ground
5	Ground
6	R-Ground
7	G-Ground
8	B-Ground
9	No Connection
10	Ground
11	No Connection
12	(SDA)
13	H-Sync (Composite Sync)
14	V-Sync
15	(SCL)

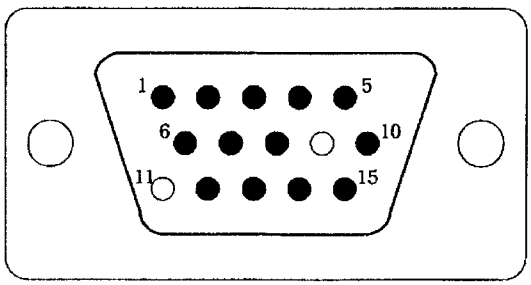

Confidential - Do Not Copy

PIN ASSIGNMENT

The digital input use a 24 Pin DVI_D connector.

Pin	Description
1	TMDS negative differential input, channel 2
2	TMDS positive differential input, channel 2
3	Logic Ground
4	Reserved. No connection
5	Reserved. No connection
6	DDC2B Clock
7	DDC2B Data
8	Reserved. No connection
9	TMDS negative differential input, channel 1
10	TMDS positive differential input, channel 1
11	Logic Ground
12	Reserved. No connection
13	Reserved. No connection
14	Power
15	Logic Ground
16	SENSE Pin, Pull High
17	TMDS negative differential input, channel 0
18	TMDS positive differential input, channel 0
19	Logic Ground
20	Reserved. No connection
21	Reserved. No connection
22	Logic Ground
23	TMDS positive differential input, reference clock
24	TMDS negative differential input, reference clock

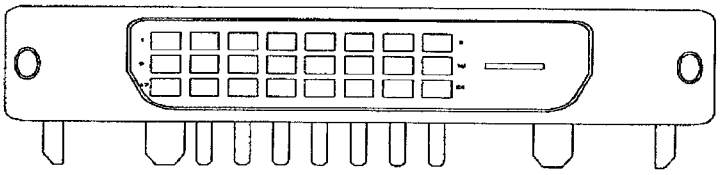

Confidential - Do Not Copy

MAIN BOARD I/O CONNECTIONS

JP4 CONNECTION (TOP BOTTOM) "OSD CONTROL"

Pin	Description
1	"-" Key
2	" Function " Key
3	"+" Key
4	Auto
5	LED 1
6	LED 2
7	Ground
8	Power 1
9	Power 2

JP5 CONNECTION (LEFT RIGHT)

Pin	Description
1	VEE
2	VCON
3	Ground
4	Ground
5	Ground
6	VDD
7	VDD
8	VDD

Confidential - Do Not Copy

THEORY OF CIRCUIT OPERATION

The operation of keypad

The OSD is controlled through five pins and an LED. As shown on the previous page, they are Power, Auto, +, Function, and – keys, and LED.

1. The power key through POW1 and POW2 is used to control ck of CD4013. A pulse is sent to control power while pressing the power key.
2. After power on, the other four keys are in the high state due to the pull up resistor. They will transition to a low state dependent on which key is pressed. The state will be determined by the PW364 through PORTC0 to PORTC3 to activate the corresponding function.
3. The LED is bi-colored with green and orange selections. The PW364 controls the LED's through PORTC4 and PORTC5. During normal operation the POCTC5 (LED2) is set to a high state and PORTC4 (LED1) is set to a low state. These will reverse during power saving.

Operation of the clock

ICS501 is used to generate the memory system clock (MCKEXT) and display clock (DCKEXT). The power of ICS501 is filtered through L10, L31 and L32.

1. During normal operation the PW364 sets PORTA7 (CLKEN) to a high state and enables CLK to output 100MHz.
2. While in the power saving mode, the PW364 sets PORTA7 (CLKEN) to a low state and disables the CLK output. In this mode the LED is orange and the screen is blank.

Confidential - Do Not Copy

THEORY OF CIRCUIT OPERATION

The function block and parameters of ICS501 are as follows :

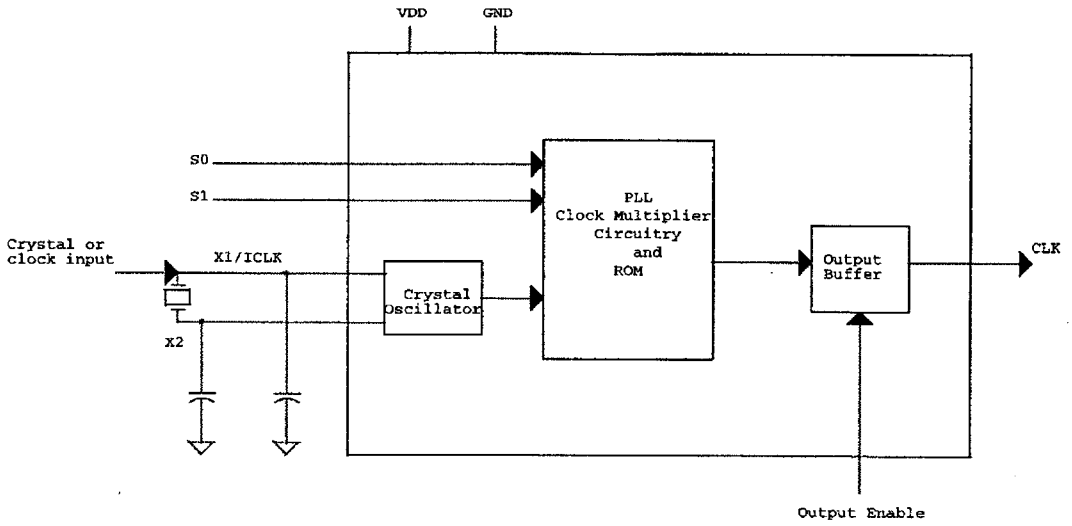

S1	S0	CLK
0	0	4X input
0	M	5.3125X input
0	1	5X input
M	0	6.25X input
M	M	2X input
M	1	3.125X input
1	0	6X input
1	M	3X input
1	1	8X input

0 : direct connected to GND
1 : direct connected to VCC
M : leave unconnected (floating)

Confidential - Do Not Copy

THEORY OF CIRCUIT OPERATION

THE OPERATION OF THE ANALOG PORT

The analog port is a 15 pin mini D-Sub connector for receiving the video signal from the host device. It features an EEPROM which complies with the DDC1/DDC2B protocol, H-sync and V-sync detecting circuitry which regenerates a synchronous signal for PW364 detection, video signal matching circuitry, and a AD9884A for capturing the RGB graphics signal and digitizing each pixel.

The pin assignments of the 15 pin connector are shown below:

Pin No.	Pin Name	Description
1	GRAI	Red signal
2	GGAI	Green signal
3	GBAI	Blue signal
4	GND	Ground
5	GND	Ground
6	GND	R-Ground
7	GND	G-Ground
8	GND	B-Ground
9	X	No connection
10	GND	Ground
11	X	No connection
12	RGSA	SDA
13	GHSI	H-Sync
14	RVSI	V-Sync
15	RGSL	SCL

The RGB graphics signal of the host device is transmitted to the analog port through pins 1 to 3. The transmission lines should be 75ohm resistance matched at R18, R19 and R20. Over voltage protection is provided by D5, D6 and D7. The video signal should be coupled to RIN, GIN, BIN and SOGIN of AD9884A through C42, C47, C48 and C49.

The EDID data is stored in EEPROM (24LC21) which complies with the DDC1/DDC2B protocol that performs a plug and play function. When in DDC1 protocol, the host device accesses the EDID data through RVSI (pin14) and RGSA (pin12) while RGSL (pin15) is held high. However, in DDC2B protocol the host device accesses EDID data through RGSA (pin12) and RGSL (pin15). The GSCL, GSDA and GVSI pins should be pulled up through R5, R6 and R7. Over voltage protection is provided by D1, D2, D3 and ZD4 with a clamping limit of 5 volts.

Confidential - Do Not Copy

THEORY OF CIRCUIT OPERATION

The PW364 sets PORTB3 (ASYOE) to a high state that will allow 74LCX125 (U10) to output the GHS and GVS signals which are then detected at GHSI (pin 13) and RVSI (pin 14). When GHS and GVS are detected, the PW364 will configure the registers of AD9884A to satisfy the operation through SCL and SDA of I^2C bus. Conversely, when PW364 sets PORTB3 (ASYOE) to a low state, the analog port is disabled and the display is in the digital interface mode or power saving mode.
The AD9884A is an 8-bit, 140 Msps, monolithic analog interface for capturing RGB graphics signals from personal computers and workstations. It includes +1.25V reference, PLL to generate a pixel clock from Hsync, and programmable gain, offset , and clamp circuits .

The functional block diagram of AD9884A is shown below:

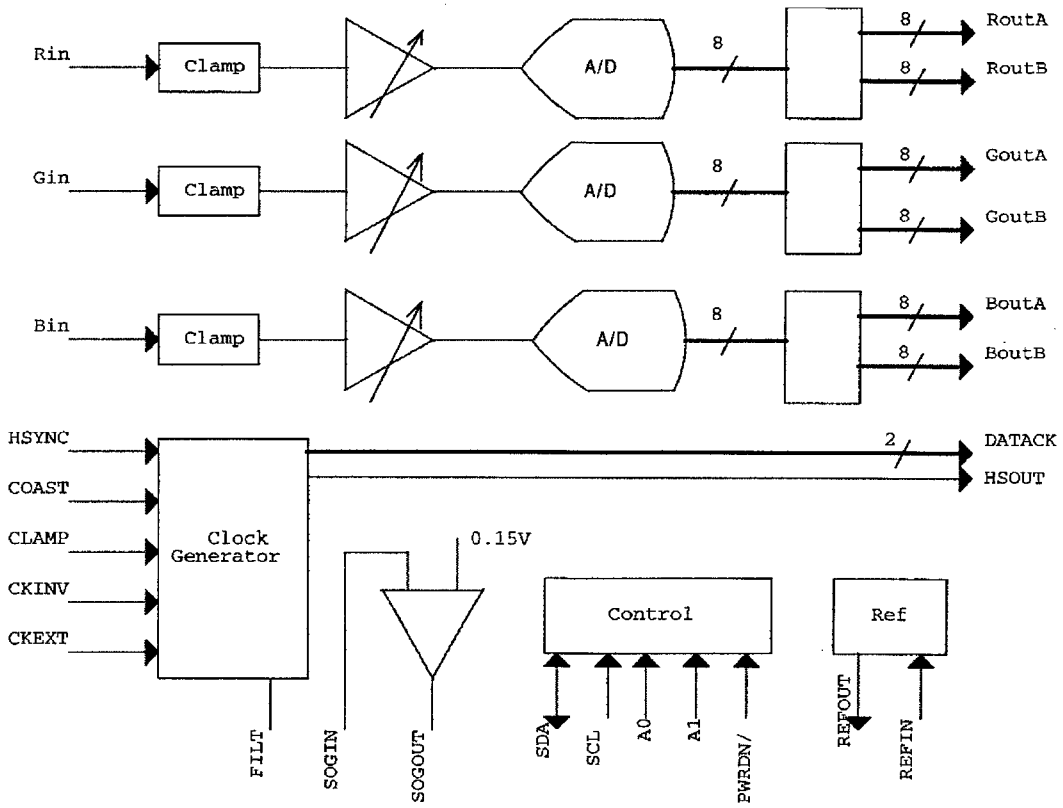

Confidential - Do Not Copy

THEORY OF CIRCUIT OPERATION

If the user changes to analog mode or the analog port is reactivated from the host device, then the PW364 will set PORTB3 (ASYOE) and PORTB2 (ADCOE) to high states to enable H-Sync, V-Sync, and AD9884A. The PW364 will change the PLL division ratio, clock phase, VCO range, charge pump current, etc., depending on the timing of GHS and GVS. The action should be fulfilled through SDA and SCL of the I^2C bus to change the data of control registers of AD9884A. The PLL derives a master clock from the incoming H-Sync signal. The master clock frequency is then divided by an integer value, and the divider's output is phase-locked to H-Sync. The PLL characteristic is determined by the loop filter design which is controlled by PLL charge pump current (CURRENT) and VCO range setting (VCORNGE).

The values of VCO range and charge pump current are shown below:

Vcornge	Range (MHz)
00	20-60
01	50-90
10	80-120
11	110-140

Current	Current (uA)
000	50
001	100
010	150
011	250
100	350
101	500
110	750
111	1500

Whenever the contrast or brightness of the analog port is adjusted, then the input gain or input offset should be adjusted through the I^2C bus.
The power of AD9884A is controlled by PORTB5 (PWAD) of Pw364 and filtered by L22, L11, L12 and L13. The H-Sync input is used as a reference to generate the pixel sampling clock. A 5-bit value (PHASE) adjusts the sampling phase in 32 steps across one pixel time, to generate a stable timing relationship between HSOUT and DATACK. The captured analog RGB data is digitized and output to odd and even data channel port A and port B. The output data is aligned to the leading edge of HSOUT. If the signal of sync on green is detected by SOGIN then the SOGOUT will produce a digital composite sync.
Conversely, if the analog port is disabled, then PORTB3 (ASYOE) and PORTB2 (ADCOE) of PW364 will be in the low state setting the AD9884A to power down mode and all outputs of AD9884A to tristate .

Confidential - Do Not Copy

THEORY OF CIRCUIT OPERATION

The operation of PW364

The PW364 is a highly integrated "System on a chip" that interfaces computer graphics and video inputs in virtually any format to a fixed frequency flat panel display. An embedded DRAM frame buffer and memory controller perform frame rate conversion. Computer images from VGA to SXGA resolution input to the chip can be resized to fit on the target display device. The on-chip microprocessor incorporates a frame buffer, resizing circuitry and peripheral circuit for frame rate conversion, image scaling, automatic image optimization, picture in picture, on screen display and user adjustment.

The internal block diagram of PW364 is shown below:

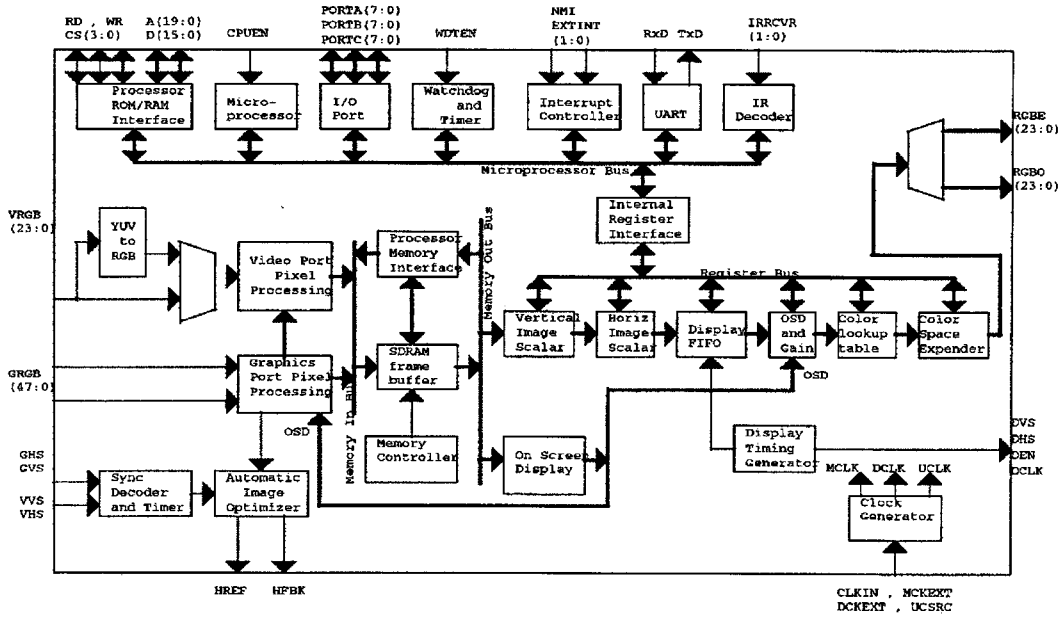

The interface of PW364 is composed of a microprocessor interface, graphics port and display port.

Microprocessor interface

When power is present and the power key is pressed, then the reset circuit sets RESET to a high state and the PW364 to the initial state. After that, the RESET will transition to a low state and the PW364 starts to work. The microprocessor executes the programs and configures the internal registers. The execution speed of the CPU is determined by MCKEXT. The normal frequency is 125 MHz, but is 40 MHz while in power saving. The D[15:0] , A[19:1] , RDN , ROMOEN and ROMWEN are used to access external FLASH memory.
The GPIO block incorporates three 8-bit general purpose I/O ports. Each bit in each port is individually controllable as either input or output.

Confidential - Do Not Copy

THEORY OF CIRCUIT OPERATION

The three ports are configured as shown below:

Pin name	Function	Type	Description
PORTA0	SDA	Input / Output	
PORTA1	SCL	Input / Output	
PORTA2	X		
PORTA3	X		
PORTA4	AUXPWON	Output	Panel Enable
PORTA5	LCDPWON	Output	Voltage control of power saving
PORTA6	X		
PORTA7	CLKEN	Output	Enable of DCKEXT and high frequency clock of MCKEXT
PORTB0	PWSI	Output	Power on of digital port
PORTB1	TMDSOE	Output	Digital port output enable
PORTB2	ADCOE	Output	Analog port output enable
PORTB3	ASYOE	Output	Analog port sync. enable
PORTB4	SCDT	Input	Digital sync. detect
PORTB5	PWAD	Output	Power on of analog port
PORTB6	X		
PORTB7	X		
PORTC0	PORTC0	Input	Key detection
PORTC1	PORTC1	Input	Key detection
PORTC2	PORTC2	Input	Key detection
PORTC3	PORTC3	Input	Key detection
PORTC4	PORTC4	Output	LED
PORTC5	PORTC5	Output	LED
PORTC6	X		
PORTC7	X		

Confidential - Do Not Copy

THEORY OF CIRCUIT OPERATION

Graphics port

The graphics port (Gport) is an input interface for high speed RGB data (up to SXGA). It accepts incoming data at one or two pixels per clock. It also has a sync separator circuit, timing signals for PLL control, clock buffering and conditioning circuitry. The graphics port has two input sources from an analog port and a digital port. Analog and digital data cannot be processed simultaneously. This is controlled through ADCOE and TMDSOE.

The block diagram of graphics port is shown below:

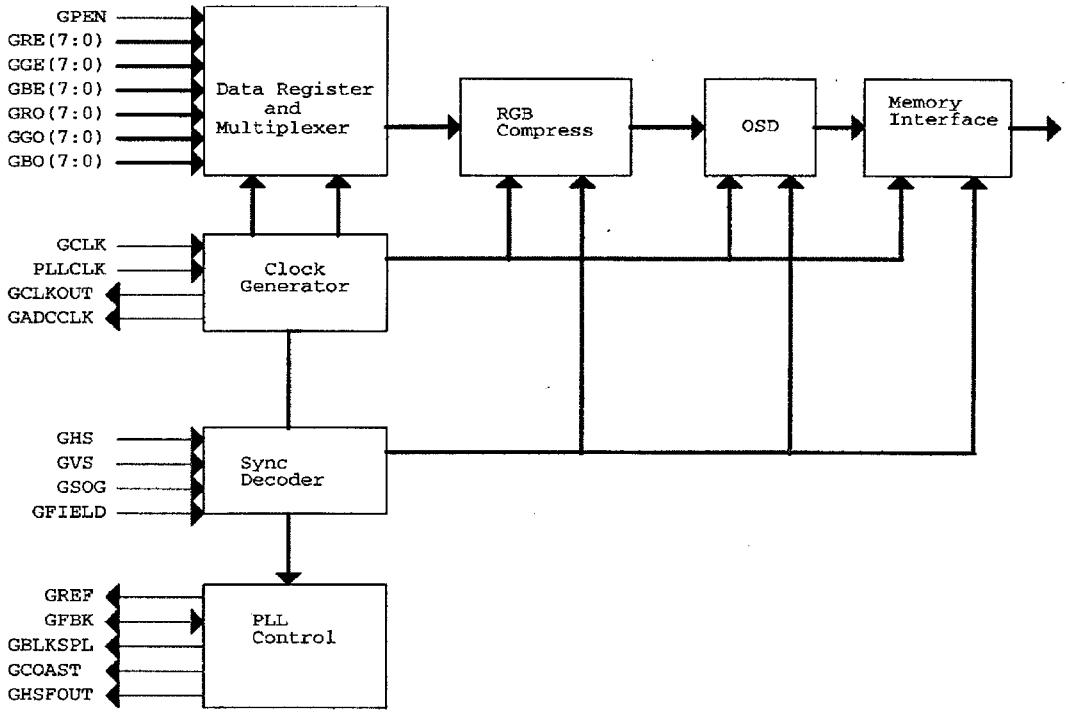

Confidential - Do Not Copy

THEORY OF CIRCUIT OPERATION

The sync decoder detects and processes the horizontal sync (GHS), vertical sync (GVS) , sync on green (GSOG) , and field (GFIELD) inputs used for timing. There are several bits to indicate the status of the inputs. For horizontal sync, HSOK=1 indicates that the horizontal line rate is faster than 10KHz. For vertical sync, VSOK=1 indicates that the vertical field or frame rate is faster than 10Hz. For sync on green, SOGACT=1 indicates that transitions on GSOG are occurring faster than 10Hz.
The PLL control block generates the timing signals required for an external PLL. GCOAST is an output used to tell the PLL to coast during vertical blanking. This is used to keep the PLL from making spurious change due to extra or missing HSYNC pulses. Output GREF is a polarity corrected delayed version of the active horizontal sync signal . GREF is delayed from the input HSYNC by an amount specified by register PHASE(7:0) . Changing PHASE will change the set up /hold time relationship between the sample clock and the data coming into the external ADC.
Output GHSFOUT is the field output signal used to tell an external ADC whether even or odd pixels are being captured during half sample mode.
When EXTFCE=1 the external flow control is enabled, each new line is marked by an edge on the GLAVIN input (pin GFBK), but while EXTFCE=0 the GFBKINinput (pin GFBK) is used as the input HSYNC signal for pixel counters.

Display port

The display port processes and prepares the data for display. The output data is sent out on pins DRE(7:0) , DGE(7:0) , DBE(7:0) , DRO(7:0) , DGO(7:0) and DBO(7:0) that is controlled by display timing generator .

The block diagram of display port is as follows :

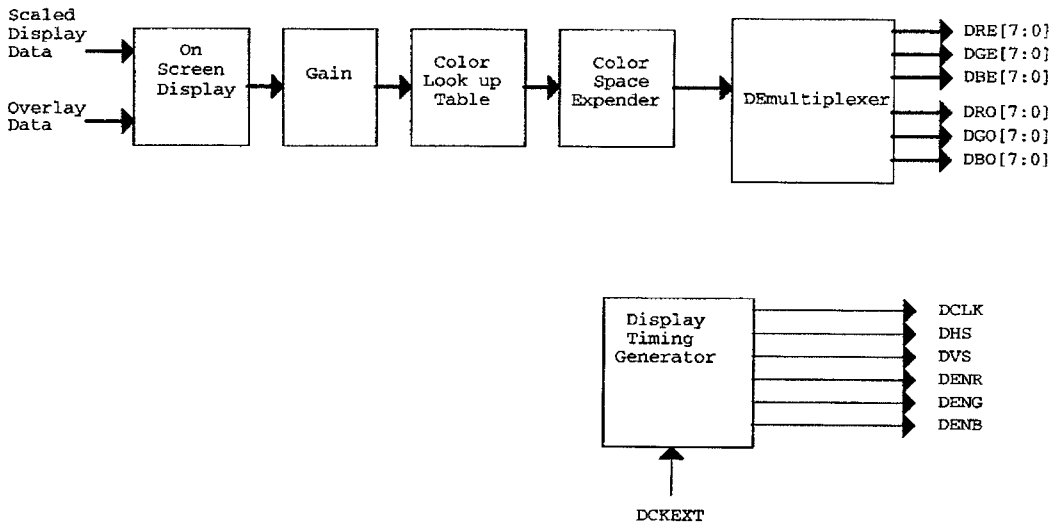

Confidential - Do Not Copy

THEORY OF CIRCUIT OPERATION

The on screen display data can be merged into the video data after the scaling process. The on-screen display data can also be added as the data is input to the video port, or as data is input to the graphics port.

The gain function is applied to every pixel and it has the same form as the overlay functions. Specifically, the pixels are processed as follows :
Output red pixel = ((input red pixel) * RCONT(7:0) / 128) + RBRITE(7:0)
Output green pixel = ((input green pixel) * GCONT(7:0) / 128) + GBRITE(7:0)
Output blue pixel = ((input blue pixel) * BCONT(7:0) / 128) + BBRITE(7:0)

The color look up table replaces each input pixel with a new value based on register tables stored in the PW364. This function is used to compensate the inherent gammas of the display device and the data source. It uses piece-wise linear function to get the output value.

The demultiplexer registers the display pixels before they output to the display. The pixels can also be set to zero here, or set to the default value. The demultiplexer can support one pixel per clock or two pixels per clock mode. In single pixel mode, the data is sent out on pins DRE97:0) , DGE(7:0) and DBE(7:0) every DCLK. In dual pixel mode, the data is sent out with even pixels on pins DRE(7:0) , DGE(7:0) , and DBE(7:0) and odd pixels on pins DRO(7:0) , DGO(7:0) , and DBO(7:0) .

The PW364 generates the vertical and horizontal timing signals for the display device, and internal timing signals for the display port portion of the PW364. The DHS and VHS output signals can be active high or low, depending on the HSPOL and VSPOL bits. Similarly, DENPOL controls the polarity of the DENR, DENG and DENB outputs. The DDEN bit enables the DHS, DVS, DENR, DENG and DENB outputs. The horizontal counter starts with the leading edge of horizontal sync. All horizontal timing is referenced to this edge.

Confidential - Do Not Copy

THEORY OF CIRCUIT OPERATION

The DS90C383 transmitter converts 28 bits of COMS/TTL data into four LVDS (Low Voltage Differential Signaling) data streams. A phase-locked signal is transmitted in parallel with the data streams over a fifth LVDS link for every cycle of the transmit clock. 28 bits of input data are sampled and transmitted. The DS90CF384 receiver converts the LVDS data streams back into 28 bits of CMOS/TTL data. At a transmit clock frequency of 65MHz, 24 bits of RGB data and 4 bits of LCD timing and control data (FPLINE, FPFRAME, DRDY, CONTROL) are transmitted at a rate of 455 Mbps per LVDS data channel. Using a 65MHz clock, the data throughput is 227 Megabytes per second. The Transmitter is offered with programmable edge data strobes for convenient interface with a variety of graphics controllers. The Transmitter can be programmed for Rising edge strobe or Falling edge strobe through a dedicated pin.

This chipset is an ideal means to solve EMI and cable size problems associated with wide, high speed TTL interfaces.

Features

- Programmable Transmitter(DS90C383) strobe select (Rising or Falling edge strobe)
- Single +3.3V supply
- Low power CMOS design (<250Mw TYP total)
- Power-down mode (<0.5mW total)
- Single pixel per clock XGA(1024x768) ready
- Supports VGA, SVGA, XGA and higher addressability
- Up to 227 Megabytes/sec bandwidth
- Narrow bus reduces cable size
- 345mV swing LVDS devices for low EMI
- PLL requires no external components
- Low profile 56-lead TSSOP package
- Falling edge data strobe Receiver(DS90CF384)
- Compatible with TIA/EIA-644 LVDS standard and the VESA FPDI-2(draft) standard

Confidential - Do Not Copy

THEORY OF CIRCUIT OPERATION

DS90C383 Block Diagrams

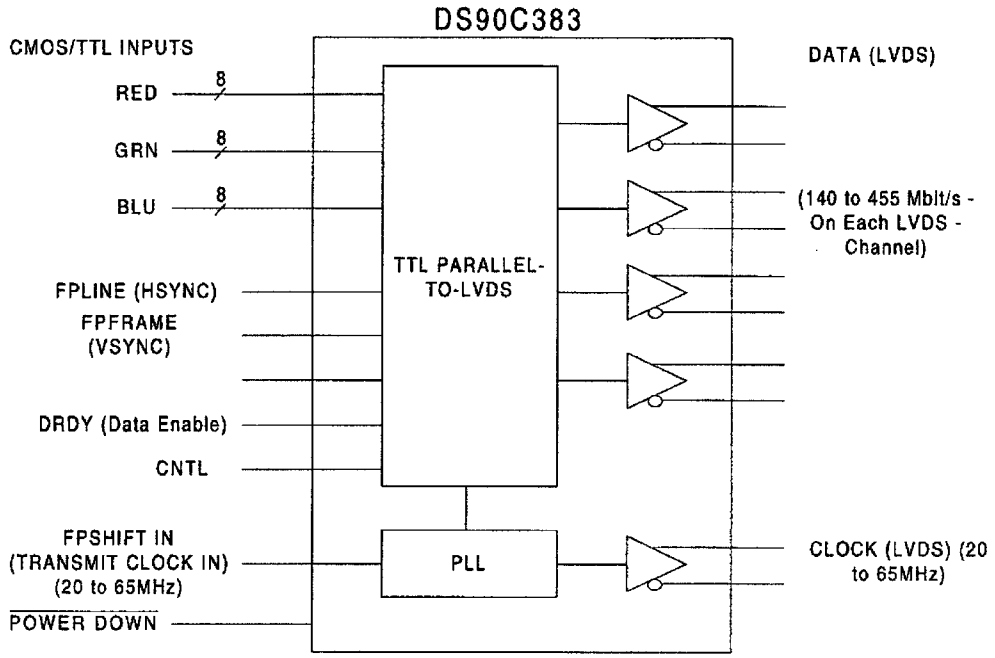

DS90C383 Pin Description - FPD Link Transmitter

Pin Name	I/O	No.	Description
TxIN	I	28	TTL level input. This includes: 8 Red, 8 Green, 8 Blue and 4 control lines - FPLINE, FPFRAME, DRAY AND CNTL (also referred to as HSYNC, VSYNC, Data Enable, CNTL).
TxOUT+	O	4	Positive LVDS differential data output.
TxOUT-	O	4	Negative LVDS differential data output.
FPSHIFT IN	I	1	TTL level clock input. The falling edge acts as data strobe.
R_FB	I	1	Programmable strobe select.
TxCLK OUT+	O	1	Positive LVDS differential clock output.
TxCLK OUT-	O	1	Negative LVDS differential clock output.
/PWR DOWN	I	1	TTL level input Assertion (low input) tri-states the output, ensuring low current at power down.
Vcc	I	4	Power supply pins for TTL inputs.
GND	I	5	Ground pins for TTL inputs.
PLL Vcc	I	1	Power supply pin for PLL.
PLL GND	I	2	Ground pins for PLL.
LVDS Vcc	I	1	Power supply pin for LVDS outputs.
LVDS GND	I	3	Ground pins for LVDS outputs.

Confidential - Do Not Copy

THEORY OF CIRCUIT OPERATION

PIN DESCRIPTION OF U33 :

Pin No.	Pin Name	Type	Description
1	Vcc	I	Power of TTL input
2	TXIN5	I	Even pixel (first pixel) bus of Red bit 1
3	TXIN6	I	Even pixel (first pixel) bus of Red bit 7
4	TXIN7	I	Even pixel (first pixel) bus of Green bit 2
5	GND	I	Ground of TTL input
6	TXIN8	I	Even pixel (first pixel) bus of Green bit 3
7	TXIN9	I	Even pixel (first pixel) bus of Green bit 4
8	TXIN10	I	Even pixel (first pixel) bus of Green bit 0
9	Vcc	I	Power of TTL input
10	TXIN11	I	Even pixel (first pixel) bus of Green bit 1
11	TXIN12	I	Even pixel (first pixel) bus of Green bit 5
12	TXIN13	I	Even pixel (first pixel) bus of Green bit 6
13	GND	I	Ground of TTL input
14	TXIN14	I	Even pixel (first pixel) bus of Green bit 7
15	TXIN15	I	Even pixel (first pixel) bus of blue bit 2
16	TXIN16	I	Even pixel (first pixel) bus of blue bit 0
17	R_FB	I	Edge select for latching data
18	TXIN17	I	Even pixel (first pixel) bus of blue bit 1
19	TXIN18	I	Even pixel (first pixel) bus of blue bit 3
20	TXIN19	I	Even pixel (first pixel) bus of blue bit 4
21	GND	I	Ground of TTL input
22	TXIN20	I	Even pixel (first pixel) bus of blue bit 5
23	TXIN21	I	Even pixel (first pixel) bus of blue bit 6
24	TXIN22	I	Even pixel (first pixel) bus of blue bit 7
25	TXIN23	I	Unused
26	Vcc	I	Power of TTL input
27	TXI24N	I	H-Sync for panel
28	TXIN25	I	V-Sync for panel
29	GND	I	Ground of TTL input
30	TXIN26	I	Data Enable for panel

Confidential - Do Not Copy

THEORY OF CIRCUIT OPERATION

PIN DESCRIPTION OF U33 :

Pin No.	Pin Name	Type	Description
31	TXCLK IN	I	Dot clock for panel
32	/PWR DWN	I	Power down enable
33	PLL GND	I	Ground for PLL
34	PLL Vcc	I	Vcc for PLL
35	PLL GND	I	Ground for PLL
36	LVDS GND	I	Ground for LVDS
37	TXOUT3+	O	Positive differential data output 3
38	TXOUT3-	O	Negative differential data output 3
39	TXCLKOUT+	O	Positive differential clk output
40	TXCLKOUT-	O	Negative differential clk output
41	TXOUT2+	O	Positive differential data output 2
42	TXOUT2-	O	Negative differential data output 2
43	LVDS GND	I	Ground for LVDS
44	LVDS Vcc	I	Vcc for LVDS
45	TXOUT1+	O	Positive differential data output 1
46	TXOUT1-	O	Negative differential data output 1
47	TXOUT0+	O	Positive differential data output 0
48	TXOUT0-	O	Negative differential data output 0
49	LVDS GND	I	Ground for LVDS
50	TXIN27	I	Even pixel (first pixel) bus of Red bit 0
51	TXIN0	I	Even pixel (first pixel) bus of Red bit 2
52	TXIN1	I	Even pixel (first pixel) bus of Red bit 3
53	GND	I	Ground of TTL input
54	TXIN2	I	Even pixel (first pixel) bus of Red bit 4
55	TXIN3	I	Even pixel (first pixel) bus of Red bit 5
56	TXIN4	I	Even pixel (first pixel) bus of Red bit 6

Confidential - Do Not Copy

THEORY OF CIRCUIT OPERATION

PIN DESCRIPTION OF U32 :

Pin No.	Pin Name	Type	Description
1	Vcc	I	Power of TTL input
2	TXIN5	I	Odd pixel (second pixel) bus of Red bit 1
3	TXIN6	I	Odd pixel (second pixel) bus of Red bit 7
4	TXIN7	I	Odd pixel (second pixel) bus of Green bit 2
5	GND	I	Ground of TTL input
6	TXIN8	I	Odd pixel (second pixel) bus of Green bit 3
7	TXIN9	I	Odd pixel (second pixel) bus of Green bit 4
8	TXIN10	I	Odd pixel (second pixel) bus of Green bit 0
9	Vcc	I	Power of TTL input
10	TXIN11	I	Odd pixel (second pixel) bus of Green bit 1
11	TXIN12	I	Odd pixel (second pixel) bus of Green bit 5
12	TXIN13	I	Odd pixel (second pixel) bus of Green bit 6
13	GND	I	Ground of TTL input
14	TXIN14	I	Odd pixel (second pixel) bus of Green bit 7
15	TXIN15	I	Odd pixel (second pixel) bus of blue bit 2
16	TXIN16	I	Odd pixel (second pixel) bus of blue bit 0
17	R_FB	I	Edge select for latching data
18	TXIN17	I	Odd pixel (second pixel) bus of blue bit 1
19	TXIN18	I	Odd pixel (second pixel) bus of blue bit 3
20	TXIN19	I	Odd pixel (second pixel) bus of blue bit 4
21	GND	I	Ground of TTL input
22	TXIN20	I	Odd pixel (second pixel) bus of blue bit 5
23	TXIN21	I	Odd pixel (second pixel) bus of blue bit 6
24	TXIN22	I	Odd pixel (second pixel) bus of blue bit 7
25	TXIN23	I	Unused
26	Vcc	I	Power of TTL input
27	TXI24N	I	H-Sync for panel
28	TXIN25	I	V-Sync for panel
29	GND	I	Ground of TTL input
30	TXIN26	I	Data Enable for panel

Confidential - Do Not Copy

THEORY OF CIRCUIT OPERATION

PIN DESCRIPTION OF U32 :

Pin No.	Pin Name	Type	Description
31	TXCLK IN	I	Dot clock for panel
32	/PWR DWN	I	Power down enable
33	PLL GND	I	Ground for PLL
34	PLL Vcc	I	Vcc for PLL
35	PLL GND	I	Ground for PLL
36	LVDS GND	I	Ground for LVDS
37	TXOUT3+	O	Positive differential data output 3
38	TXOUT3-	O	Negative differential data output 3
39	TXCLKOUT+	O	Positive differential clk output
40	TXCLKOUT-	O	Negative differential clk output
41	TXOUT2+	O	Positive differential data output 2
42	TXOUT2-	O	Negative differential data output 2
43	LVDS GND	I	Ground for LVDS
44	LVDS Vcc	I	Vcc for LVDS
45	TXOUT1+	O	Positive differential data output 1
46	TXOUT1-	O	Negative differential data output 1
47	TXOUT0+	O	Positive differential data output 0
48	TXOUT0-	O	Negative differential data output 0
49	LVDS GND	I	Ground for LVDS
50	TXIN27	I	Odd pixel (second pixel) bus of Red bit 0
51	TXIN0	I	Odd pixel (second pixel) bus of Red bit 2
52	TXIN1	I	Odd pixel (second pixel) bus of Red bit 3
53	GND	I	Ground of TTL input
54	TXIN2	I	Odd pixel (second pixel) bus of Red bit 4
55	TXIN3	I	Odd pixel (second pixel) bus of Red bit 5
56	TXIN4	I	Odd pixel (second pixel) bus of Red bit 6

Confidential - Do Not Copy

THEORY OF CIRCUIT OPERATION

Memory Device

The flash memory (U13) stores the program code of the firmware. The address bus and data bus are connected directly to the PW364 (U15) which includes a scaling chip embedded with a 186 CPU, OSD generator, Sync decoder, and frame buffer.
The MBM29LV400 (U13) is a 4M bits, 3.0V-only flash memory organized as 512K bytes of 8 bits each word or 256K bytes of 16 bits each word. The devices are designed to be programmed in-system with the standard system 3.0V Vcc supply. 12.0V Vpp and5.oV Vcc are not required for write or erase operations. The devices can also be reprogrammed in standard EPROM programmers. In order to eliminate bus contention the devices have separate chip enable (/CE), write enable (/WE), and output enable (/OE) controls.
The MBM29LV400 are pin and command set compatible with JEDEC standard EEPROMs. Commands are written to the command register using standard microprocessor write timings. Register contents serve as input to a state-machine which controls the erase and programming circuitry. Write cycle also internally latch address and data needed for the programming and erase operations. Reading data out of the devices is similar to reading from 5.0V and 12.0V flash or EPROM devices.
The devices feature single 3.0V power supply operation for both read and write functions. Internally generated and regulated voltages are provided for the program and erase operations. A low Vcc detector automatically inhibits write operations on the loss of power.
The 24LC16 (U14) is a general 16K bits Electrically Erasable PROM. It allows the VG181 to save most parameters of the OSD functions, such as, contrast, brightness, H/V position, H-size, phase, etc. Some of these values are global, but some are independent by each input timing. The device is organized as eight blocks of 256 x 8 bit memory with a 2-wire serial interface. Low voltage design permits operation down to 2.5 volts with standby and active currents of only 5uA and 1mA respectively. The 24LC16 has a page-write capability for up to16K bytes of data.

Confidential - Do Not Copy

THEORY OF CIRCUIT OPERATION

Power System

The VG181 can reduce power consumption effectively when the display enters the power saving mode. With the smart power system implementation, the system consumes less than 3 Watts. It also supports auto source detection for the digital and analog port, while in the power saving mode. The auto-recover function provides users with a convenient feature if they try to use two PCs on one display. As shown on the schematic, "sheet 8 of 8," the VG181 power system contains an electronic switch for main power, a switching regulator for 3.3V, and other power MOS switches for different parts of the system.

The electronic switch is based on a D type flip-flop (U21) and a power MOS (U20). There is also a over voltage protector which is composed of Q5, Q6, and ZD2 to prevent high voltage from getting into the system. When the input exceeds approximately 15 volts, Q5 and Q6 will be turned on. So, the D flip-flop will be preset to a high state and turn off the power MOS (U20). The PW1 and PW2 are connected to the keypad of " POWER" directly. Once the user presses the POWER keypad, there will be a pulse on pin3 of U21 for triggering the flip-flop. Then pin1 of U21 will cycle it's state to high or low level for controlling the power on or off.

The 3.3V regulator is composed of a comparator (U26), a power MOS (U25), and L25, D15, C157, C158 etc. The reference voltage is made from the ZD03, R120, R121, and VR1.So the regulator output voltage will follow the voltage on pin5 of U26. There is also a over voltage protector within the regulator. If the voltage on pin11 (which feeds back from regulator output) is higher than the voltage on pin5, then U27 will be turned off so it can prevent an over voltage from damaging most of the devices on the main board.

The LCDPWON is the control signal from CPU. It will turn off the SW-12V which is the main power source of LCD module when the system enters the power saving mode. The AUXPWON is the enable signal for inverter by the same condition.

Confidential - Do Not Copy

THEORY OF CIRCUIT OPERATION

DVI_D Interface

VG181 uses the TMDS interface to support the digital port input. The Sil161 receiver uses PanelLink Digital Technology for inputs ranging from VGA to SXGA @75Hz.

The Sil161 receiver supports true color 24 bit/pixel/16.7M color in 1 or 2 pixels/clock mode. It also features an inter-pair skew tolerance up to 1 full input clock cycle. In addition, the receiver data output is time staggered to reduce ground bounce which affects EMI. All PanelLink products are designed on scaleable CMOS architecture to support future performance requirements while maintaining the same logical interface.

PanelLink Digital technology simplifies PC and display interface design by resolving many system level issues associated with high-speed digital design.

Function Block Diagram

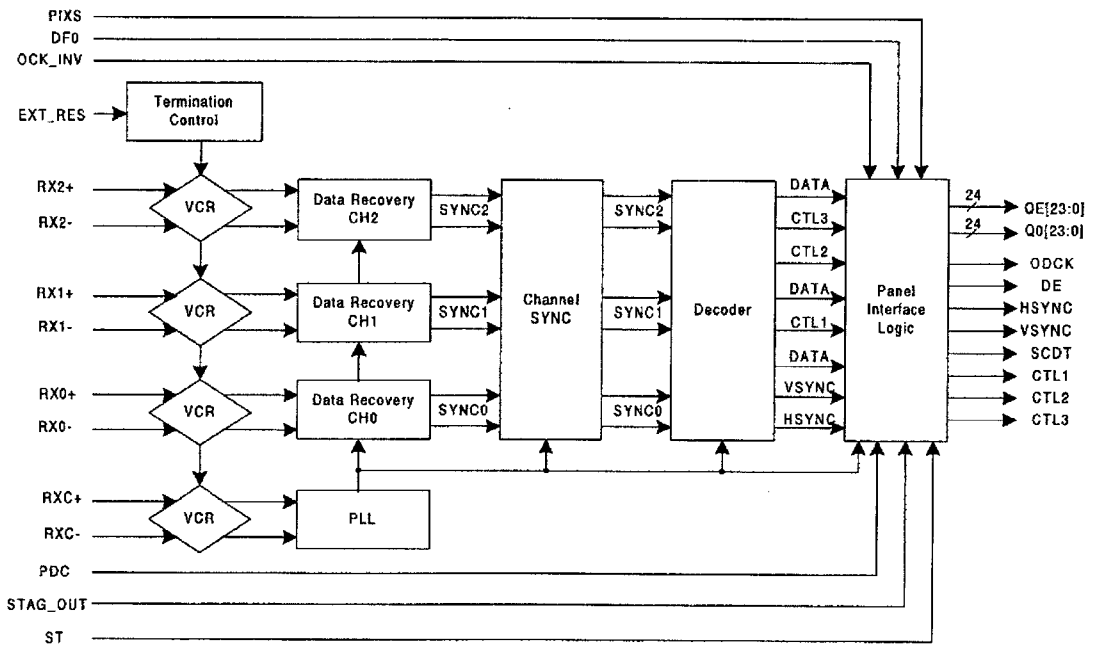

Confidential - Do Not Copy

THEORY OF CIRCUIT OPERATION

Output Pin Description (U1)

Pin Name	Pin No.	Type	Description
QE23-QE0	10~37	Out	Output Even Data[23:0] corresponds to 24-bit pixel data for 1-pixel/clock input mode and to the first 24-bit pixel data for 2-pixel/clock mode. Output data is synchronized with output data clock(ODCK). Refer to the TFT and DSTN Signal Mapping application notes (SiI/AN-0007-A and SiI/AN-0008-A) which tabulates the relationship between the input data to the transmitter and output data from the receiver. A low level on PD or PDO will put the output drivers into a high impedance (tri-state) mode. A weak internal pull-down brings each output to ground.
QO23-QO0	49~77	Out	Output Odd Data[23:0] corresponds to the second 24-bit pixel data for 2-pixels/clock mode. During 1-pixel/clock mode, these outputs are driven low. Output data is synchronized with output data clock (ODCK). Refer to the TFT and DSTN Signal Mapping application notes (SiI/AN-0007-A and SiI/AN-0008-A) which tabulates the relationship between the input data to the transmitter and output data from the receiver. A low level on PD or PDO will put the output drivers into a high impedance (tri-state) mode. A weak internal pull-down device brings each output to ground.
ODCK	44	Out	Output Data Clock. A low level on PD or PDO will put the output driver into a high impedance (tri-state) mode. A weak internal pull-down device brings the output to ground.
DE	46	Out	Output Data Enable. This signal qualifies the active data area. A low level on PD or PDO will put the output driver into a high impedance (tri-state) mode. A weak internal pull-down device brings the output to ground.
HSYNC	48	Out	Horizontal Sync input control signal.
VSYNC	47	Out	Vertical Sync input control signal.
CTL1	40	Out	Reserved
CTL2	41	Out	Reserved
CTL3	42	Out	Reserved A low level on PD or PDO will put the output drivers (except CTL1 by PDO) into a high impedance (tri-state) mode. A weak internal pull-down device brings each output to ground.

Confidential - Do Not Copy

THEORY OF CIRCUIT OPERATION

Configuration Pin Description

Pin Name	Pin No.	Type	Description
OCK_INV	100	In	ODCK Polarity. A low level selects normal ODCK output. A high level (3.3V) selects inverted ODCK output. All other outputs signals are not affected by this pin. They will maintain the same timing no matter the setting of OCK_INV pin.
PIXS	4	In	Pixel Select. A low level indicates one pixel (up to 24-bits) per clock mode using QE[23:0]. A high level (3.3V) indicates two pixels (up to 48-bits) per clock mode using qe[23:0] for first pixel and QO[23:0] for second pixel.
DFO	1	In	Output Data Format. This pin controls clock output format. A low level indicates that ODCK runs continuously for TFT PANEL SUPPORT. A high level indicates that ODCK is stopped (LOW) when DE is low for DSTN panel support. Refer to the TFT and/or DSTN Signal Mapping application notes (Sil/AN-0007-A and Sil/AN-0008-A) for a table on TFT or DSTN panel support.
STAG_OUT	7	In	A high level select normal simultaneous outputs on all odd and even data lines. A low level selects staggered output drive. This function is only available in 2-pixels per clock mode.
ST	3	In	Output Drive. A high level selects HIGH output drive strength. A low level selects LOW output drive stength.

Power Management Pin Description

Pin Name	Pin No.	Type	Description
SCDT	8	Out	Sync Detect. A high level is output when DE is actively toggling indicating that the link is alive. A low level is output when DE is inactive, indicating the link is down. Can be connected to PDO to power the outputs when DE is not detected. The SCDT output itself, however, remains in the active mode at all times.
PDO	9	In	Output Driver Power Down (active low). A high level indicates normal operation. A low level puts all the output drivers only (except SCDT and CTL1) into a high impedance (tri-state) mode. A weak internal pull-down device brings each output to ground. PDO is a sub-sef of the PD description. The chip is not in power-down mode with this pin. There is an internal pull-up resistor that defaults the chip to normal operation if left unconnected. SCDT and CTL1 are not tri-stated by this pin.

Confidential - Do Not Copy

THEORY OF CIRCUIT OPERATION

Power Management Pin Description

Pin Name	Pin No.	Type	Description
PD	2	In	Power Down (active low). A high level (3.3V) indicates normal operation and a low level indicates power down mode. During power down mode, all output buffers are disabled and brought low, all analog logic is powered down, and all inputs are disabled.

Differential Signal Data Pin Description

Pin Name	Pin No.	Type	Description
RX0+	90	Analog	TMDS Low Voltage Differential Signal input data pairs.
RX0-	91	Analog	
RX1+	85	Analog	
RX1-	86	Analog	
RX2+	80	Analog	
RX2-	81	Analog	
RXC+	93	Analog	TMDS Low Voltage Differential Signal input data pairs.
RXC-	94	Analog	
EXT_RES	96	Analog	Impedance Matching Control. Resistor value should be ten times the characteristic impedance of the cable. In the common case of 50 transmission line, an external 500 resistor must be connected between AVCC and this pin.

Reserved Pin Description

Pin Name	Pin No.	Type	Description
RESERVED	99	In	Must be tied high for normal operation.

Confidential - Do Not Copy

THEORY OF CIRCUIT OPERATION

Power and Ground Pin Description

Pin Name	Pin No.	Type	Description
VCC	6,38,67	Power	Digital Core VCC, must be set to 3.3V.
GND	5,39,68	Ground	Digital Core GND.
OVCC	18,29,43,57,78	Power	Output VCC, must be set to 3.3V.
OGND	19,28,45,58,76	Ground	Output GND.
AVCC	82,84,88,95	Power	Analog VCC, must be set to 3.3V.
AGND	79,83,87,89,92	Ground	Analog GND.
PVCC	97	Power	PLL Analog VCC, must be set to 3.3V.
PGND	98	Ground	PLL Analog GND.

Confidential - Do Not Copy

WAVEFORMS

H-SYNC SIGNAL (U33/U32 AT PIN 27)

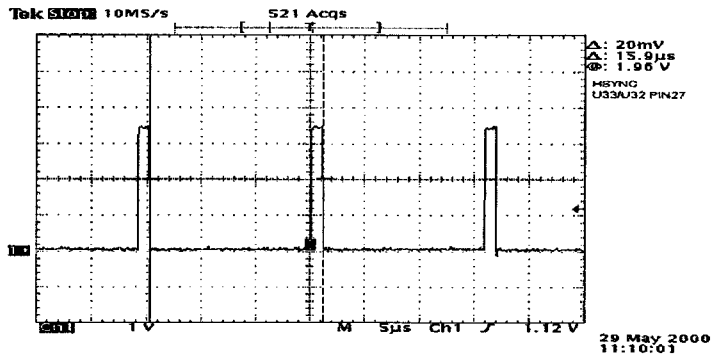

V-SYNC SIGNAL (U33/U32 AT PIN 28)

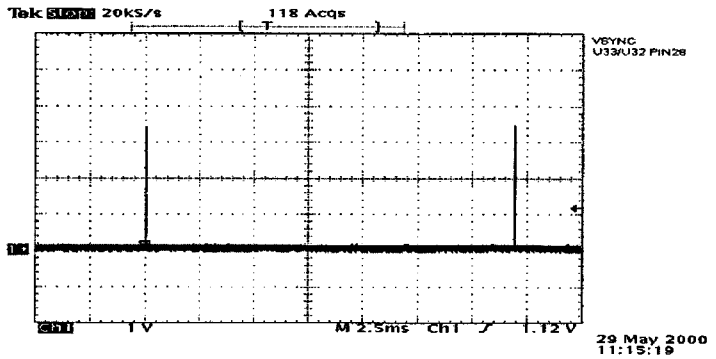

DE_O (U33/U32 AT PIN 30)

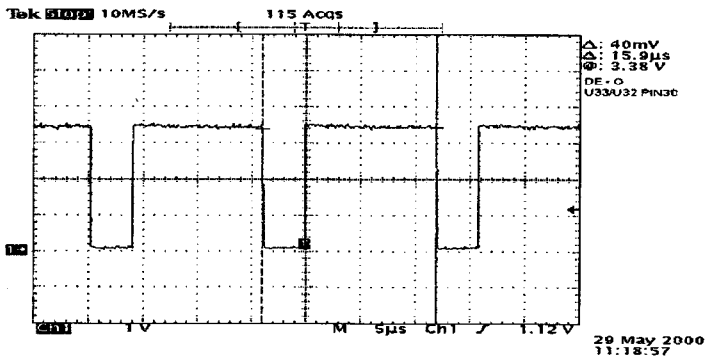

Confidential - Do Not Copy

WAVEFORMS

DCLK (U33/U32 AT PIN 31)

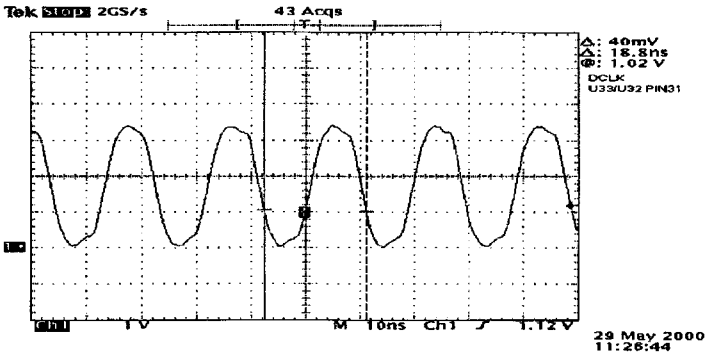

CH1 : VSYNC (U33/U32 AT PIN 28) ; CH2 : HSYNC (U33/U32 AT PIN 27)

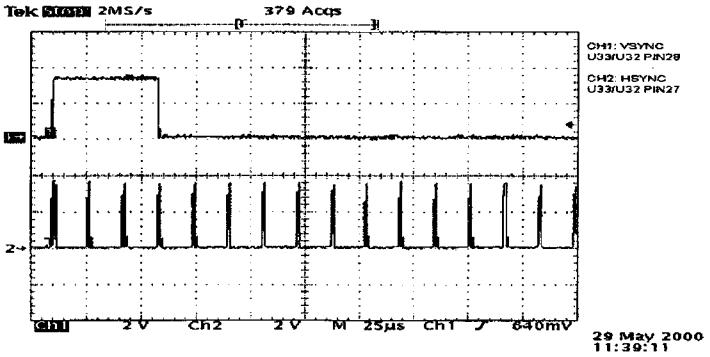

CH1 : VSYNC (U33/U32 AT PIN 28) ; CH2 : DE-O (U33/U32 AT PIN 30)

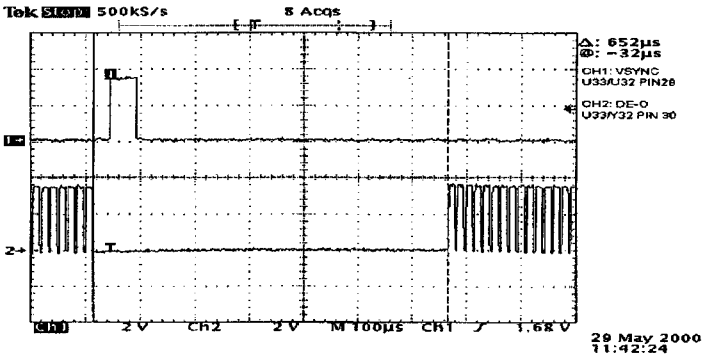

Confidential - Do Not Copy

WAVEFORMS

CH1 : OE (U13 AT PIN 28) ; CH2 : DN (U13 AT PIN 29~45)

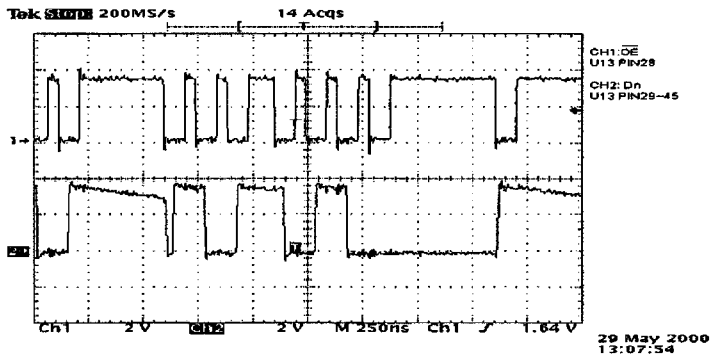

CH1 : OE (U13 AT PIN 28) ; CH2 : AN (U13 AT PIN**)

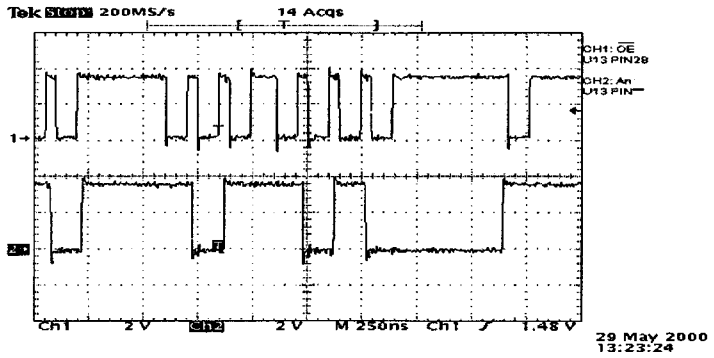

CH1 : SDA (U14 AT PIN 5) ; CH2 : SCL (U14 AT PIN 5)

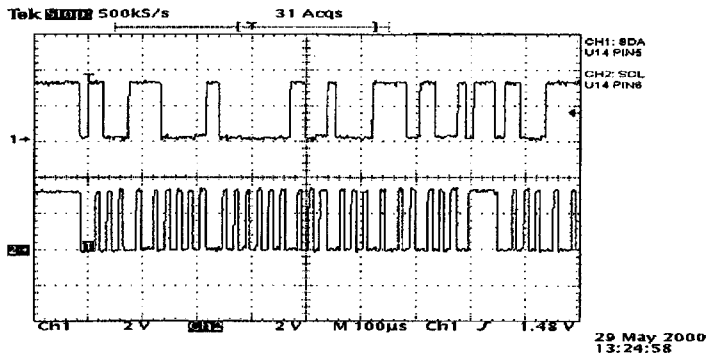

Confidential - Do Not Copy

WAVEFORMS

X1 (U7/U12 AT PIN 1)

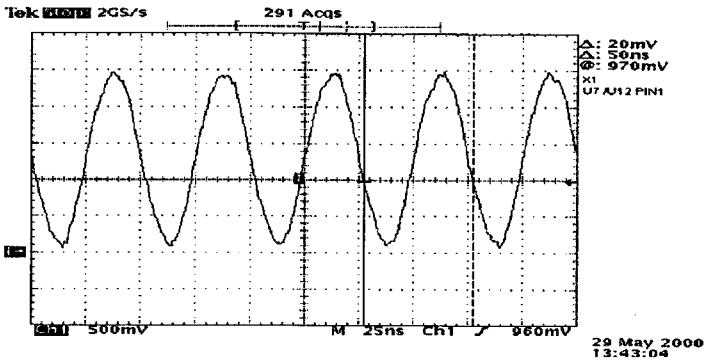

DCKEXT (U12 AT PIN 5)

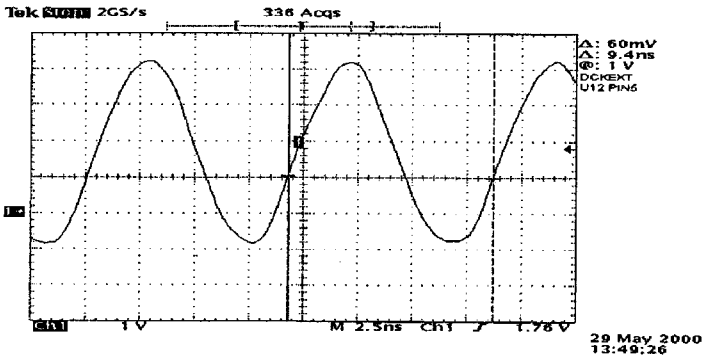

MCKEXT (U7 AT PIN 5)

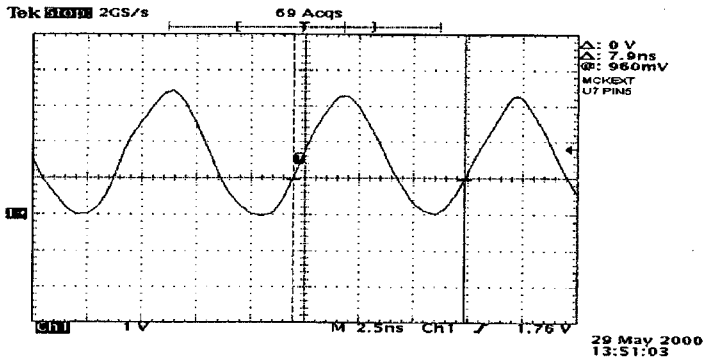

Confidential - Do Not Copy

WAVEFORMS

AUTO/FUN / "+" / "-" (JP4 AT PIN 1~4)

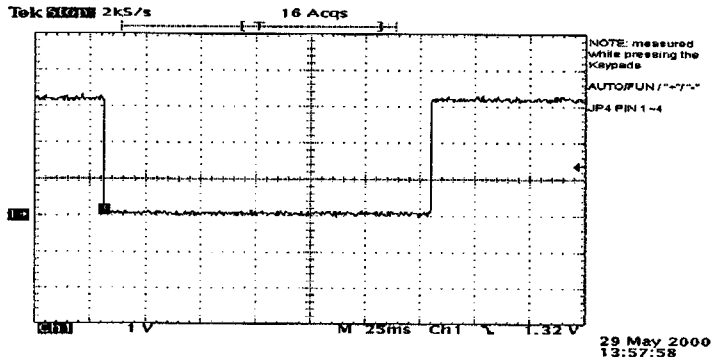

CH1 : RWV33 (C159 PIN "+") ; CH2 : REST (U30 PIN12)

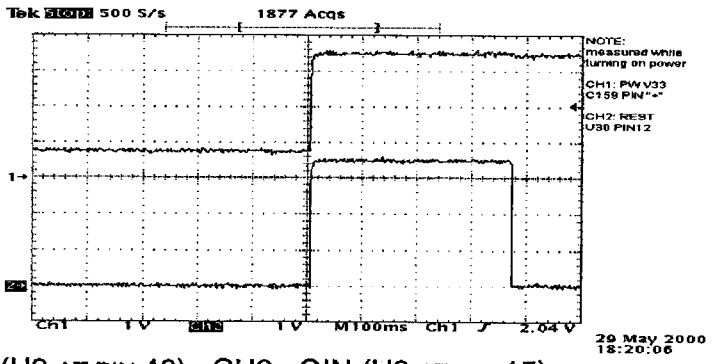

CH1 : GREF (U9 AT PIN 40) ; CH2 : GIN (U9 AT PIN 15)

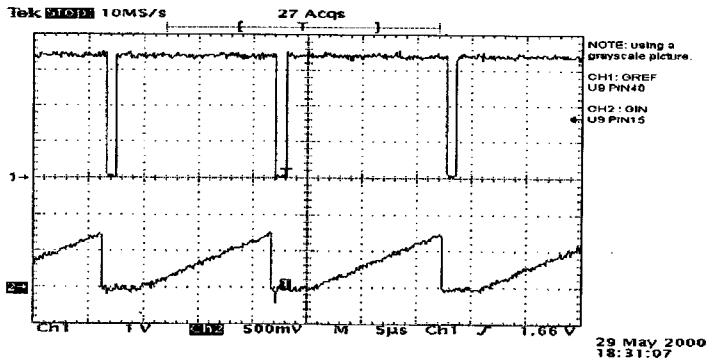

WAVEFORMS

CH1 : GHS (U10 AT PIN 8) ; CH2 : GREF (U9 AT PIN 40)

Confidential - Do Not Copy

CH1 : GVS (U10 AT PIN 11) ; CH2 : GIN (U9 AT PIN 15)

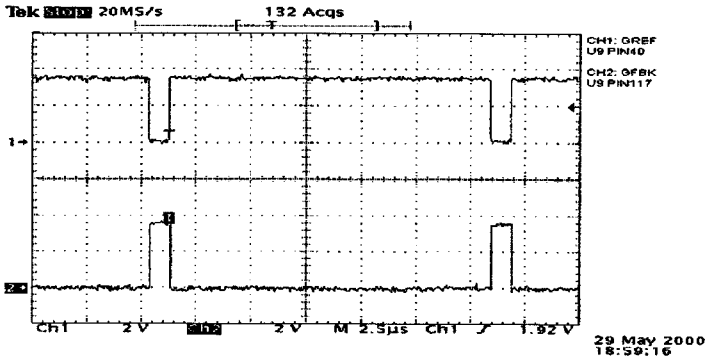

CH1 : GFBK (U9 AT PIN 117) ; CH2 : GCLK (U9 AT PIN 115)

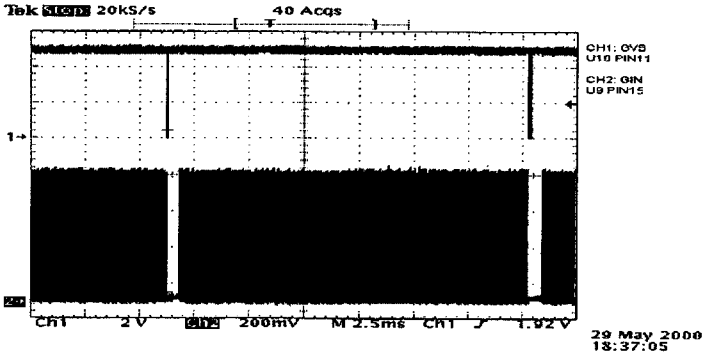

WAVEFORMS

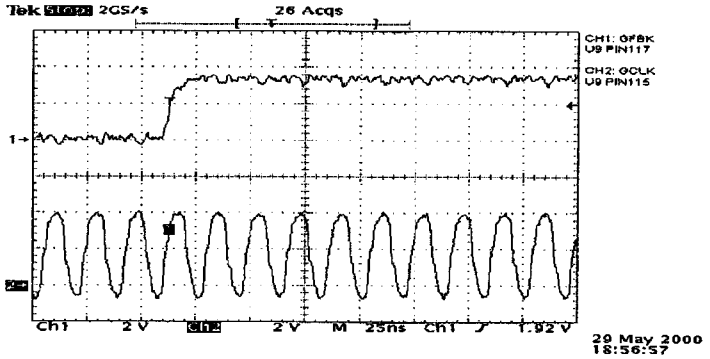

CH1 : GREF (U9 AT PIN 40) ; CH2 : GFBK (U9 AT PIN 117)

Confidential - Do Not Copy

SOGIN (U9 AT PIN 14)

CH1 : U25 PIN 5/6/7/8 ; CH2 : U25 PIN 2/4

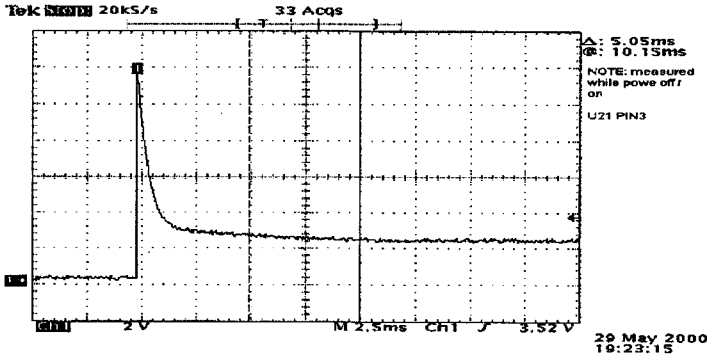

WAVEFORMS

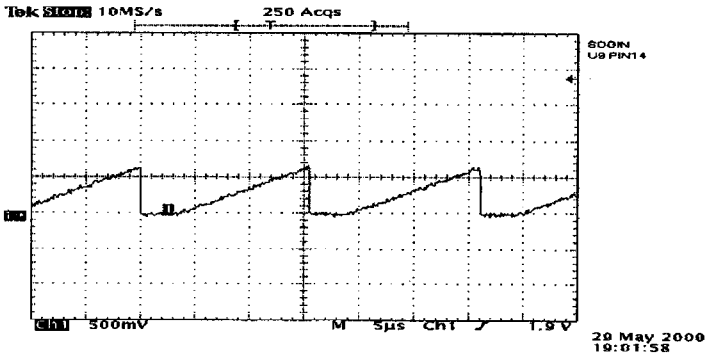

U21 PIN3

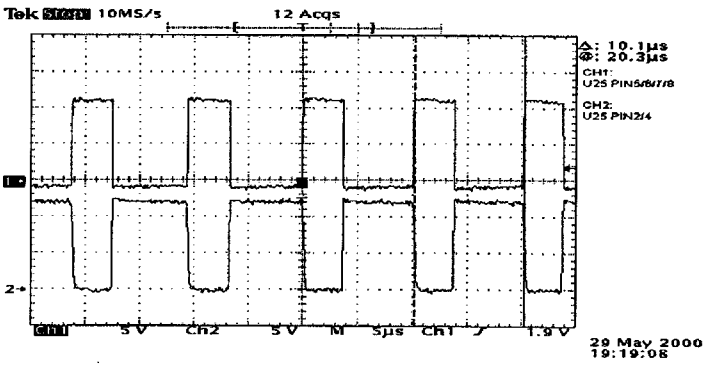

Confidential - Do Not Copy

TROUBLE SHOOTING

NO IMAGE DISPLAYED

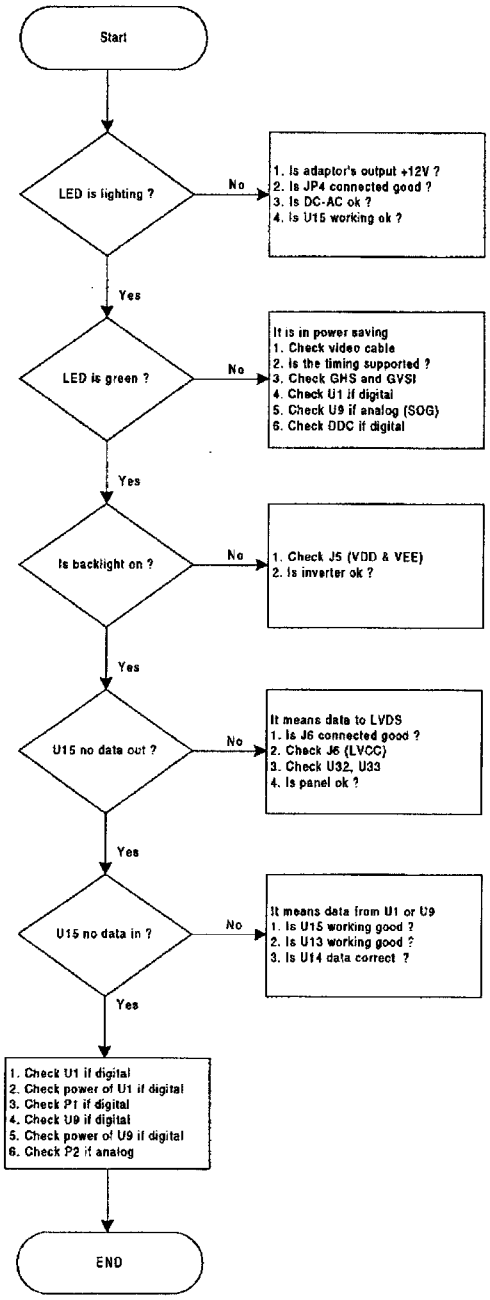

Confidential - Do Not Copy

TROUBLE SHOOTING

R, G, B Is Not Displayed Correctly

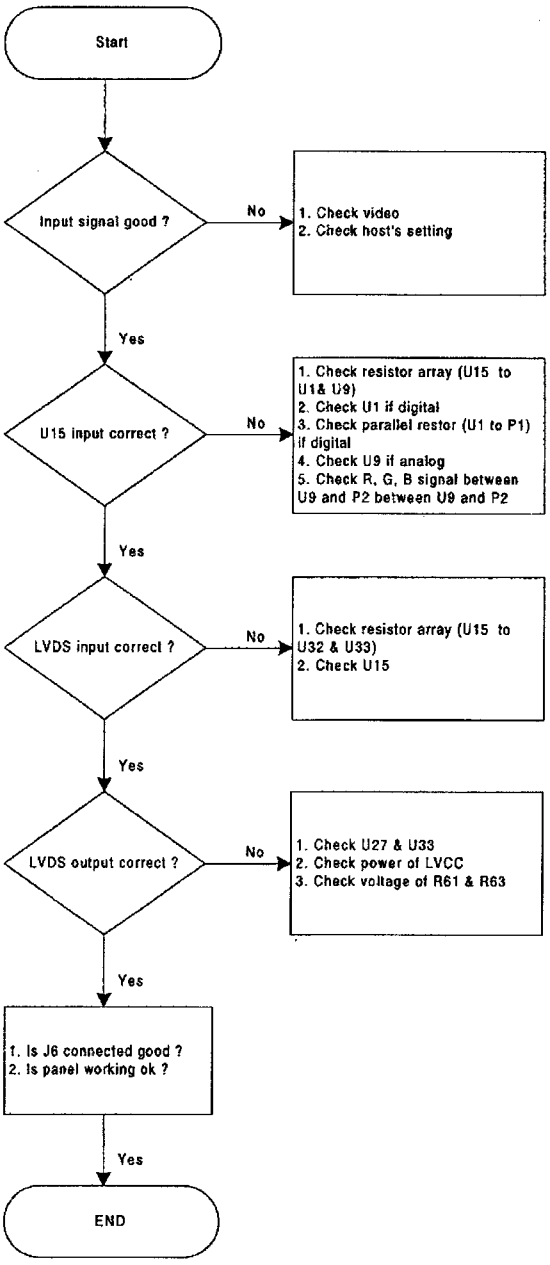

Confidential - Do Not Copy

TROUBLE SHOOTING

TROUBLE WITH THE DC-DC CONVERTER

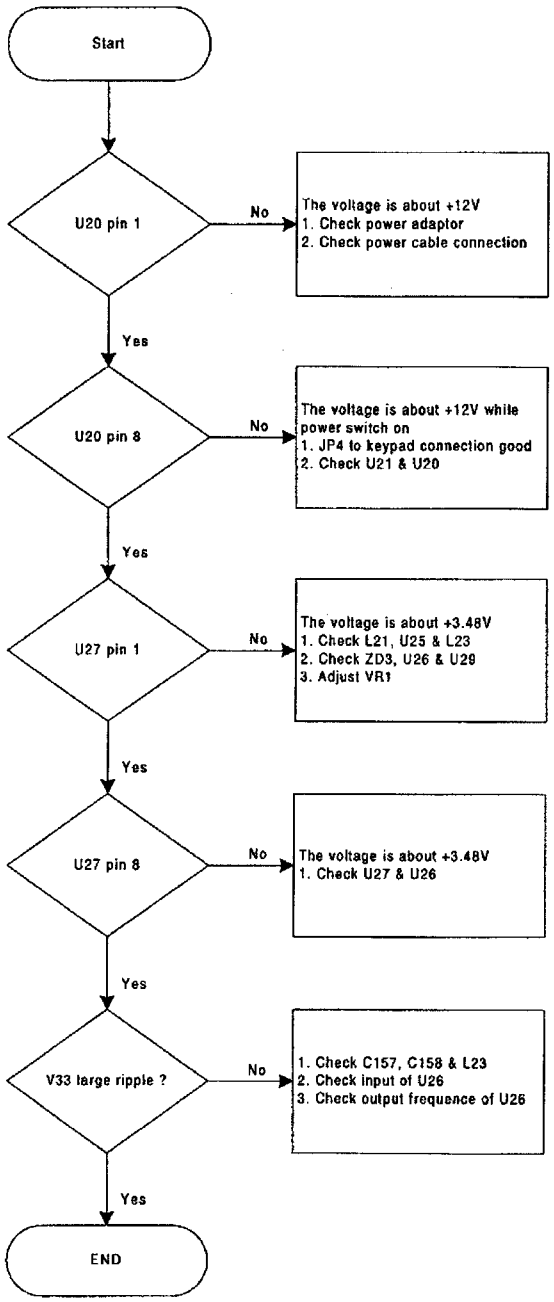

Confidential - Do Not Copy

TROUBLE SHOOTING

TROUBLE WITH THE DDC READING

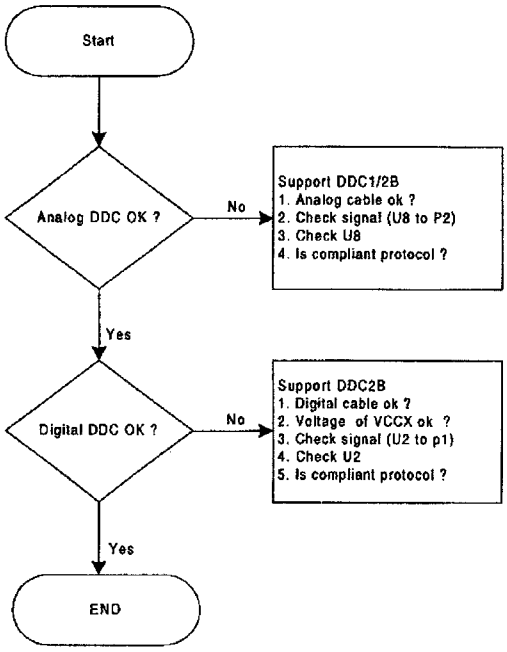

Confidential - Do Not Copy

TROUBLE SHOOTING

POOR IMAGE QUALITY

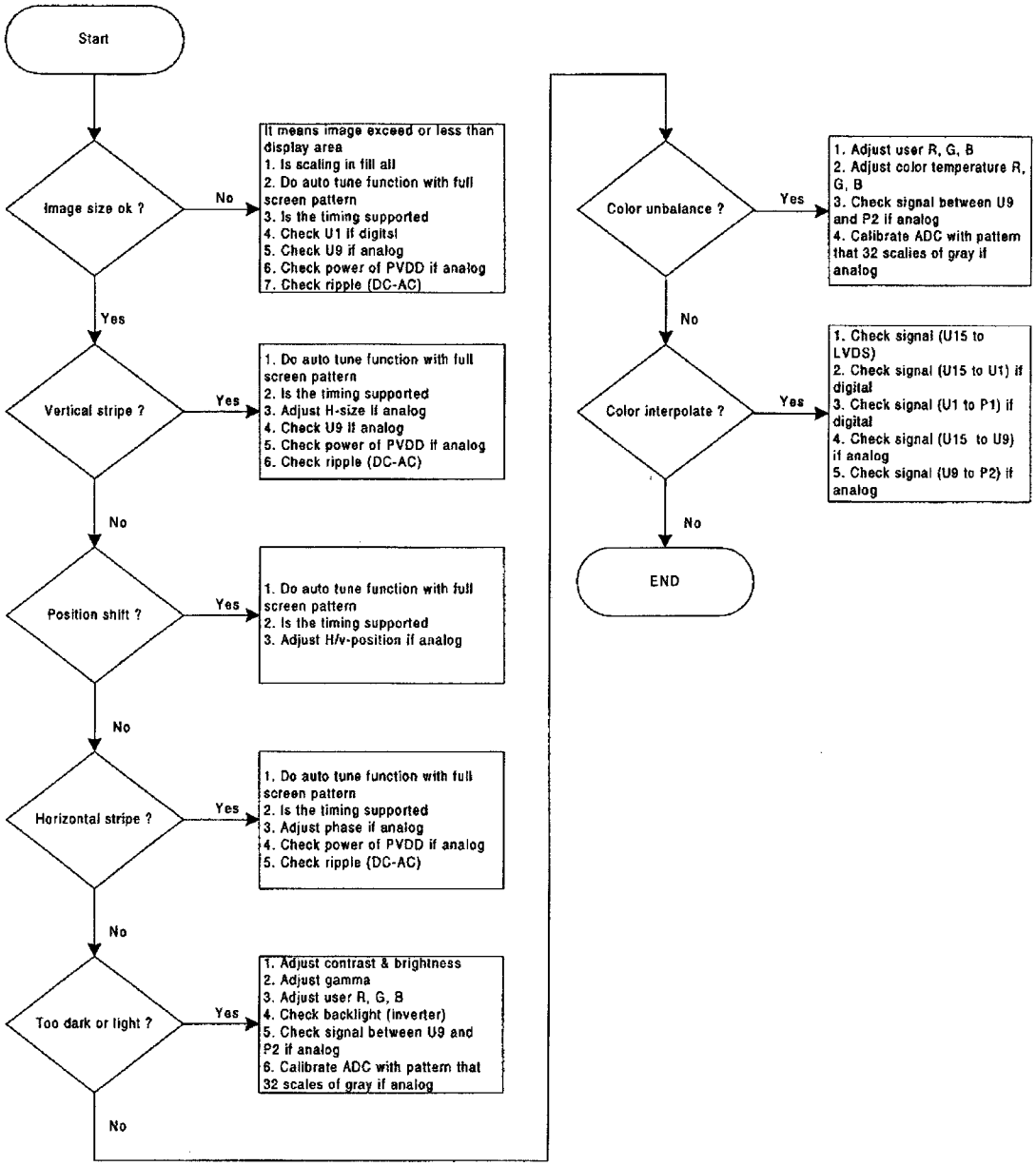

Confidential - Do Not Copy

SPARE PARTS LIST

PART NO	DESCRIPTION	LOC	QTY
0130-0000-1858	RES. CF 0.0ohm 1/8W J 0805	L14, L16	2
0130-0000-1859	RES. CF 0.0ohm 1/8W J 1206	L18	1
0130-0508-1859	RES. CF 0.5ohm 18/W J 1206	L1-L4, L11, L12	6
0280-2000-0116	X'TAL 20MHz 49/US 20ppm 20PF 0.5mW	Y3, Y4	2
0320-3000-0010	POWER CORD 6ft 220V VDE		1
0320-4000-0010	POWER CORD 6ft 110V UL/CSA AL		1
0321-0400-0060	S.CABLE 1800mm 15(3R-3R) 3+6C PC99		1
0321-0400-0100	S.CABLE DVI18-DVI18 2000mm 4P+5C		1
0370-0000-3552	Chip Bead Core 30ohm (MLB 201209-0030A-NI)	L5, L6	2
0370-0000-4453	Chip Bead Core 60ohm (MLB 160808-0060A-N2)		
0370-0000-4651	Chip Bead Core 80ohm (MLB-321611-0080P-N)	L10	1
0390-3000-5012	FAST DIODE 30DF2 T	D15	1
0390-5000-5202	GEN. DIODE 1N4001F T	D11	1
0400-0501-2012	ZENER RLZ5.1C 5.09-5.37V 1/2W SMD	ZD3, ZD4	2
0400-1521-2012	ZENER RLZ16B 15.25-16.04V 1/2W SMD	ZD1, ZD2	2
0410-5000-1610	TRANSISTOR 2N3904 SMD	Q2, Q13	2
0420-1001-3601	POWER MOS IRF7304 SMD 8PIN	U16, U23, U27	3
0430-0000-6004	IC CD4049UBM SMD 16PIN	U29	1
0430-1003-4604	IC 74LCX14MTCX SMD14PIN (TSSOP)	U30	1
0430-1003-5604	IC 74LCX125MTCX SMD 14PIN (TSSOP)	U10, U4	2
0430-3001-6117	IC 24LC16B/P DIP 8PIN	U14	1
0430-4000-2004	IC LM339M SMD 14PIN	U26	1
0460-3430-0020	WH FI-S30S/DF14-30S 1571#30 100mm Core*1		1
1701-0103-4020	FRONT PANEL CAB. (VG181)		1
1701-0201-2003	REAR COVER CAB. (VG181)		1
1925-1000-0580	EPE FOAM-A		1
1925-1000-0590	EPE FOAM-B		1
1925-1000-0650	EPE FOAM-HOLDER		1
1925-1200-1660	CARTON VG181		1
1925-1300-1710	MANUAL VG181		1
3180-0022-0334	LCD BASE ASS'Y (VG181)		1
3180-0032-0156	LCD DISPLAY BD ASS'Y		1
3180-0052-0150	LCD MAIN BD ASS'Y		1

Confidential - Do Not Copy

COMPLETE PARTS LIST

MODULE NO. 2511-3316-0034 LCD MONITOR 18.1" (**VG181**)					
NO	M/S	PART NO	DESCRIPTION	LOC	Q'TY
1	M	3180-0072-0331	LCD 18.0" PANEL ASS'Y (VG181)	ASMO01	1
2	M	3180-0052-0312	LCD 18.0" PACKING ASS'Y (VG181)	ASMO02	1

MODULE NO. 3180-0022-0334 LCD BASE ASS'Y (VG181)					
NO	M/S	PART NO	DESCRIPTION	LOC	Q'TY
1	M	1701-0503-6000	SWIVEL CAP (VG181)	BS01	1
2	M	1701-0503-7000	REAR HOUSING CAP (VG181)	BS02	1
3	M	1701-0503-8000	REAR HOUSING HOLDER (VG181)	BS03	1
4	M	3180-0012-0014	NECK-BASE ASS'Y (VG181)	BS04	1
5	M	3180-0012-0025	PIVOT PLATE ASS'Y (VG181)	BS05	1

MODULE NO. 3180-0032-0156 LCD DISPLAY BD ASS'Y					
NO	M/S	PART NO	DESCRIPTION	LOC	Q'TY
6	M	0440-5000-0020	LED L-59GYW 5	LED01	1
7	M	1701-1500-0100	LED HOLDER 3PIN/LED 4x3A	LED01S	1
8	M	0170-1740-0240	PCB DISPLAY BD VO 140*25mm 1.6t S	PCB01	1
9	M	0220-7020-0167	SW TACTILE 6*6mm 4P	SW1	1
10	M	0220-7020-0167	SW TACTILE 6*6mm 4P	SW2	1
11	M	0220-7020-0167	SW TACTILE 6*6mm 4P	SW3	1
12	M	0220-7020-0167	SW TACTILE 6*6mm 4P	SW4	1
13	M	0220-7020-0167	SW TACTILE 6*6mm 4P	SW5	1
14	M	0451-2000-0964	WAFER 2.00mm 9P 90' Kink	W1	1

Confidential - Do Not Copy

COMPLETE PARTS LIST

MODULE NO. 3180-0032-0305 LCD REAR COVER ASS'Y **(VG181)**					
NO	M/S	PART NO	DESCRIPTION	LOC	Q'TY
15	M	1701-0201-2003	REAR COVER CAB.(VSC-18" BLANK)	RC01	1
16	M	1712-0100-0412	MOUNTING BRACKET (VPD180)	RC02	1
17	M	1712-0100-0460	LOCK COVER (VPD-180)	RC03	1

MODULE NO. 3180-0052-0312 LCD PACKING ASS'Y **(VG181)**					
NO	M/S	PART NO	DESCRIPTION	LOC	Q'TY
18	M	0300-7012-4003	AC TO DC ADAPTOR 12V/5A (UP06041120)	AD01	1
19	M	1925-1100-0080	PE BAG 550*800*0.04t	PA01	1
20	M	1925-1000-0580	EPE FOAM-A (VG181)	PA02	1
21	M	1925-1000-0590	EPE FOAM-B (VG181)	PA03	1
22	M	1925-1200-1130	ACCESSARY BOX (320Wx195Dx60H)	PA04	1
23	M	1936-1100-1931	B/C LBL V.SONIC VG181	PA05	1
24	M	1947-1600-0080	.INF&.ICM CD ROM DATE:990127	PA06	1
25	M	1925-1200-1660	CARTON V.SONIC VG181	PA07	1
26	M	1925-1300-1710	MANUAL V.SONIC VG181	PA08	1
27	M	1947-1600-0104	PORTRAIT CD-ROM	PA09	1
28	M	1925-1000-0650	EPE FOAM-HOLDER VG181	PA10	1
29	M	0320-4000-0010	POWER CORD 6ft 110V UL/CSA AL	PC01	1
30	M	0320-3000-0010	POWER CORD 6ft 220V VDE	PC02	1
31	M	0320-3000-0020	PC POWER CORD 6ft 220V VDE	PC03	1
32	M	0321-0400-0100	S.Cable DVI18-DVI18 2000mm 4P+5C Ivory	SG01	1
33	M	0321-0400-0060	S.CABLE 1800mm 15(3R-3R) 3+6C / PC99	SG02	1

MODULE NO. 3180-0072-0331 LCD PANEL ASS'Y **(VG181)**					
NO	M/S	PART NO	DESCRIPTION	LOC	Q'TY
34	M	1701-0103-4020	FRONT PANEL CAB.(VG181)	FP01	1
35	M	1936-1000-0060	V.SONIC LOGO-B (AL. PLATE)	FP01M	1
36	M	1701-0405-4000	BUTTON (VG181)	FP02	1
37	M	1701-0700-0050	LED LENS (VG150)	FP03	1

Confidential - Do Not Copy

COMPLETE PARTS LIST

MODULE NO. 3180-0072-0331 LCD PANEL ASS'Y **(VG181)**					
NO	M/S	PART NO	DESCRIPTION	LOC	Q'TY
38	M	3180-0032-0156	LCD 18.1" DISPLAY BD ASS'Y (VG181)	FP04	1
39	M	1721-0003-1020	TAP. SCREW-TB #3.0*10.0L,Ni	FP04M	3
40	M	0211-0181-0469	LCD MODULE 18.1" TFT ITSX94 (IBM)	FP05	1
41	M	1712-0100-1090	FRAME BRACKET (VG181)	FP06	1
42	M	1720-0003-0410	MAC. SCREW-MB M3.0*4.0L,Zn-Cc	FP06M	10
43	M	1721-0003-1020	TAP. SCREW-TB #3.0*10.0L,Ni	FP06N	13
44	M	1712-0500-0440	SHIELD-B FOR INV. (VG181)	FP07	1
45	M	1720-0003-0410	MAC. SCREW-MB M3.0*4.0L,Zn-Cc	FP07M	2
46	M	1712-0100-1110	SUPPORT BKT FOR M/B (VG181)	FP08	1
47	M	1720-0003-0410	MAC. SCREW-MB M3.0*4.0L,Zn-Cc	FP08M	3
48	M	3180-0052-0150	LCD 18.1" MAIN BD ASS'Y (VG181)	FP09	1
49	M	1720-0003-0410	MAC. SCREW-MB M3.0*4.0L,Zn-Cc	FP09M	4
50	M	1712-0500-0360	SHIELD FOR M/B (VG181)	FP10	1
51	M	1720-0003-0410	MAC. SCREW-MB M3.0*4.0L,Zn-Cc	FP10M	11
52	M	1712-0500-0370	SHIELD-A FOR INV. (VG181)	FP11	1
53	M	1720-0003-0410	MAC. SCREW-MB M3.0*4.0L,Zn-Cc	FP11M	4
54	M	3180-0032-0305	LCD 18.0" REAR COVER ASS'Y (VG181)	FP12	1
55	M	1721-0003-1020	TAP. SCREW-TB #3.0*10.0L,Ni	FP12M	6
56	M	3180-0022-0334	LCD BASE ASS'Y (VG181)	FP13	1
57	M	1720-5004-1020	MAC. SCREW-MI M4.0*10.0L,Ni	FP13M	4
58	M	1721-1004-2010	TAP. SCREW-TP #4.0x20.0L, Zn-Cc	FP13N	2
59	M	0460-1008-0030	WH PH8P-PH8P 1007#24 155mm	FP14	1
60	M	0460-1009-0070	WH PH9P-PH9P 1007#26 320mm CORE*1	FP15	1
61	M	0460-3430-0020	WH FI-S30S/DF14-30S 1571#30 100mm Core	FP16	1
62	M	1701-0900-0020	PC PLATE (70.0*45.0*0.5)	FP17	1
63	M	1701-1500-0030	WIRE SADDLE (CH-01C)	FP18	3
64	M	1947-1500-0230	SPONGE SPACER (30*10*10)	FP19	4
65	M	1947-1700-0020	SHIELDING AL. TAPE (45.0*25.0)	FP20	7
66	M	1947-1700-0190	GASKET BLOCK (20.0*10.0*10.0)	FP21	5
67	M	1947-1700-0900	SHIELDING AL. TAPE (90.0*25.0)	FP22	3

Confidential - Do Not Copy

COMPLETE PARTS LIST

MODULE NO. 3180-0052-0150 LCD MAIN BD ASS'Y (VG181)					
NO	M/S	PART NO	DESCRIPTION	LOC	Q'TY
68	M	0111-3104-5135	C/M Multi 0.1uF 50V Y5V 0805	C1	1
69	M	0111-3104-5135	C/M Multi 0.1uF 50V Y5V 0805	C10	1
70	M	0111-3104-5135	C/M Multi 0.1uF 50V Y5V 0805	C100	1
71	M	0111-3104-5135	C/M Multi 0.1uF 50V Y5V 0805	C101	1
72	M	0111-3104-5135	C/M Multi 0.1uF 50V Y5V 0805	C102	1
73	M	0111-3104-5135	C/M Multi 0.1uF 50V Y5V 0805	C103	1
74	M	0101-1220-1204	E/C GEN. 22uF 16V RV2 SMD	C104	1
75	M	0111-3104-5135	C/M Multi 0.1uF 50V Y5V 0805	C105	1
76	M	0111-3104-5135	C/M Multi 0.1uF 50V Y5V 0805	C106	1
77	M	0111-3104-5135	C/M Multi 0.1uF 50V Y5V 0805	C107	1
78	M	0111-3104-5135	C/M Multi 0.1uF 50V Y5V 0805	C108	1
79	M	0111-3104-5135	C/M Multi 0.1uF 50V Y5V 0805	C109	1
80	M	0111-3104-5135	C/M Multi 0.1uF 50V Y5V 0805	C11	1
81	M	0111-3104-5135	C/M Multi 0.1uF 50V Y5V 0805	C110	1
82	M	0111-3104-5135	C/M Multi 0.1uF 50V Y5V 0805	C111	1
83	M	0111-3104-5135	C/M Multi 0.1uF 50V Y5V 0805	C112	1
84	M	0111-3104-5135	C/M Multi 0.1uF 50V Y5V 0805	C113	1
85	M	0111-3470-5105	C/M Multi 47PF 50V NPO 0805	C114	1
86	M	0111-3470-5105	C/M Multi 47PF 50V NPO 0805	C115	1
87	M	0111-3470-5105	C/M Multi 47PF 50V NPO 0805	C116	1
88	M	0111-3100-5105	C/M Multi 10PF 50V NPO 0805	C117	1
89	M	0111-3100-5105	C/M Multi 10PF 50V NPO 0805	C119	1
90	M	0111-3104-5135	C/M Multi 0.1uF 50V Y5V 0805	C12	1
91	M	0111-3104-5135	C/M Multi 0.1uF 50V Y5V 0805	C120	1
92	M	0111-3104-5135	C/M Multi 0.1uF 50V Y5V 0805	C121	1
93	M	0111-3470-5105	C/M Multi 47PF 50V NPO 0805	C123	1
94	M	0111-3470-5105	C/M Multi 47PF 50V NPO 0805	C124	1
95	M	0111-3470-5105	C/M Multi 47PF 50V NPO 0805	C125	1
96	M	0111-3470-5105	C/M Multi 47PF 50V NPO 0805	C126	1
97	M	0111-3150-5105	C/M Multi 15PF 50V NPO 0805	C129	1
98	M	0111-3104-5135	C/M Multi 0.1uF 50V Y5V 0805	C13	1

Confidential - Do Not Copy

COMPLETE PARTS LIST

MODULE NO. 3180-0052-0150 LCD MAIN BD ASS'Y (**VG181**)					
NO	M/S	PART NO	DESCRIPTION	LOC	Q'TY
99	M	0111-3150-5105	C/M Multi 15PF 50V NPO 0805	C130	1
100	M	0101-1102-1212	E/C GEN. 1000uF 16V 105'K	C131	1
101	M	0101-1102-1212	E/C GEN. 1000uF 16V 105'K	C132	1
102	M	0111-3104-5135	C/M Multi 0.1uF 50V Y5V 0805	C133	1
103	M	0111-3104-5135	C/M Multi 0.1uF 50V Y5V 0805	C134	1
104	M	0101-1471-1211	E/C GEN. 470uF 16V 105' F	C135	1
105	M	0101-1471-1211	E/C GEN. 470uF 16V 105' F	C136	1
106	M	0111-3104-5135	C/M Multi 0.1uF 50V Y5V 0805	C137	1
107	M	0111-3101-5105	C/M Multi 100PF 50V NPO 0805	C138	1
108	M	0101-1100-1204	E/C GEN. 10uF 16V RV2 SMD	C139	1
109	M	0111-3104-5135	C/M Multi 0.1uF 50V Y5V 0805	C14	1
110	M	0111-3104-5135	C/M Multi 0.1uF 50V Y5V 0805	C140	1
111	M	0101-1109-1504	E/C GEN. 1.0uF 50V RV2 SMD	C141	1
112	M	0101-1220-1204	E/C GEN. 22uF 16V RV2 SMD	C142	1
113	M	0111-3104-5135	C/M Multi 0.1uF 50V Y5V 0805	C143	1
114	M	0111-3150-5105	C/M Multi 15PF 50V NPO 0805	C144	1
115	M	0101-1331-1104	E/C GEN. 330uF 10V 8D 85' SMD	C145	1
116	M	0101-1331-1104	E/C GEN. 330uF 10V 8D 85' SMD	C146	1
117	M	0111-3104-5135	C/M Multi 0.1uF 50V Y5V 0805	C147	1
118	M	0111-3104-5135	C/M Multi 0.1uF 50V Y5V 0805	C148	1
119	M	0111-3104-5135	C/M Multi 0.1uF 50V Y5V 0805	C149	1
120	M	0111-3104-5135	C/M Multi 0.1uF 50V Y5V 0805	C15	1
121	M	0111-3104-5135	C/M Multi 0.1uF 50V Y5V 0805	C150	1
122	M	0101-1331-1104	E/C GEN. 330uF 10V 8D 85' SMD	C151	1
123	M	0111-3150-5105	C/M Multi 15PF 50V NPO 0805	C153	1
124	M	0111-3104-5135	C/M Multi 0.1uF 50V Y5V 0805	C154	1
125	M	0111-3221-5105	C/M Multi 220PF 50V NPO 0805	C155	1
126	M	0111-3221-5105	C/M Multi 220PF 50V NPO 0805	C156	1
127	M	0101-1471-1211	E/C GEN. 470uF 16V 105' F	C157	1
128	M	0101-1471-1211	E/C GEN. 470uF 16V 105' F	C158	1
129	M	0101-1331-1104	E/C GEN. 330uF 10V 8D 85' SMD	C159	1

Confidential - Do Not Copy

COMPLETE PARTS LIST

MODULE NO. 3180-0052-0150 LCD MAIN BD ASS'Y (VG181)					
NO	M/S	PART NO	DESCRIPTION	LOC	Q'TY
130	M	0111-3104-5135	C/M Multi 0.1uF 50V Y5V 0805	C16	1
131	M	0111-3104-5135	C/M Multi 0.1uF 50V Y5V 0805	C160	1
132	M	0101-1101-1204	E/C GEN. 100uF 16V RV2 SMD	C161	1
133	M	0111-3104-5135	C/M Multi 0.1uF 50V Y5V 0805	C162	1
134	M	0111-3104-5135	C/M Multi 0.1uF 50V Y5V 0805	C163	1
135	M	0111-3104-5135	C/M Multi 0.1uF 50V Y5V 0805	C164	1
136	M	0101-1471-1211	E/C GEN. 470uF 16V 105' F	C168	1
137	M	0101-1471-1211	E/C GEN. 470uF 16V 105' F	C169	1
138	M	0111-3104-5135	C/M Multi 0.1uF 50V Y5V 0805	C170	1
139	M	0111-3104-5135	C/M Multi 0.1uF 50V Y5V 0805	C171	1
140	M	0101-1100-1204	E/C GEN. 10uF 16V RV2 SMD	C172	1
141	M	0111-3104-5135	C/M Multi 0.1uF 50V Y5V 0805	C173	1
142	M	0111-3104-5135	C/M Multi 0.1uF 50V Y5V 0805	C174	1
143	M	0111-3104-5135	C/M Multi 0.1uF 50V Y5V 0805	C175	1
144	M	0101-1471-1211	E/C GEN. 470uF 16V 105' F	C176	1
145	M	0111-3104-5135	C/M Multi 0.1uF 50V Y5V 0805	C178	1
146	M	0111-3104-5135	C/M Multi 0.1uF 50V Y5V 0805	C179	1
147	M	0111-3104-5135	C/M Multi 0.1uF 50V Y5V 0805	C18	1
148	M	0111-3104-5135	C/M Multi 0.1uF 50V Y5V 0805	C180	1
149	M	0111-3104-5135	C/M Multi 0.1uF 50V Y5V 0805	C181	1
150	M	0111-3104-5135	C/M Multi 0.1uF 50V Y5V 0805	C182	1
151	M	0111-3104-5135	C/M Multi 0.1uF 50V Y5V 0805	C183	1
152	M	0111-3104-5135	C/M Multi 0.1uF 50V Y5V 0805	C184	1
153	M	0111-3104-5135	C/M Multi 0.1uF 50V Y5V 0805	C185	1
154	M	0111-3104-5135	C/M Multi 0.1uF 50V Y5V 0805	C186	1
155	M	0111-3104-5135	C/M Multi 0.1uF 50V Y5V 0805	C187	1
156	M	0111-3104-5135	C/M Multi 0.1uF 50V Y5V 0805	C188	1
157	M	0111-3104-5135	C/M Multi 0.1uF 50V Y5V 0805	C189	1
158	M	0111-3104-5135	C/M Multi 0.1uF 50V Y5V 0805	C19	1
159	M	0101-1221-1204	E/C GEN. 220uF 16V 8D 85' SMD	C190	1
160	M	0111-3104-5135	C/M Multi 0.1uF 50V Y5V 0805	C192	1

Confidential - Do Not Copy

COMPLETE PARTS LIST

MODULE NO. 3180-0052-0150 LCD MAIN BD ASS'Y **(VG181)**					
NO	M/S	PART NO	DESCRIPTION	LOC	Q'TY
161	M	0101-1331-1104	E/C GEN. 330uF 10V 8D 85' SMD	C196	1
162	M	0111-3103-5115	C/M Multi 0.01uF 50V X7R 0805	C198	1
163	M	0111-3103-5115	C/M Multi 0.01uF 50V X7R 0805	C199	1
164	M	0111-3104-5135	C/M Multi 0.1uF 50V Y5V 0805	C20	1
165	M	0111-3221-5105	C/M Multi 220PF 50V NPO 0805	C200	1
166	M	0111-3221-5105	C/M Multi 220PF 50V NPO 0805	C201	1
167	M	0111-3221-5105	C/M Multi 220PF 50V NPO 0805	C202	1
168	M	0111-3221-5105	C/M Multi 220PF 50V NPO 0805	C203	1
169	M	0111-3104-5135	C/M Multi 0.1uF 50V Y5V 0805	C204	1
170	M	0111-3104-5135	C/M Multi 0.1uF 50V Y5V 0805	C205	1
171	M	0111-3104-5135	C/M Multi 0.1uF 50V Y5V 0805	C206	1
172	M	0101-1101-1204	E/C GEN. 100uF 16V RV2 SMD	C207	1
173	M	0111-3104-5135	C/M Multi 0.1uF 50V Y5V 0805	C22	1
174	M	0111-3104-5135	C/M Multi 0.1uF 50V Y5V 0805	C27	1
175	M	0111-3473-5115	C/M Multi 0.047uF 50V X7R 0805	C28	1
176	M	0111-3472-5115	C/M Multi 4700PF 50V X7R 0805	C29	1
177	M	0101-1220-1204	E/C GEN. 22uF 16V RV2 SMD	C3	1
178	M	0111-3104-5135	C/M Multi 0.1uF 50V Y5V 0805	C30	1
179	M	0111-3104-5135	C/M Multi 0.1uF 50V Y5V 0805	C31	1
180	M	0111-3104-5135	C/M Multi 0.1uF 50V Y5V 0805	C32	1
181	M	0111-3104-5135	C/M Multi 0.1uF 50V Y5V 0805	C33	1
182	M	0111-3104-5135	C/M Multi 0.1uF 50V Y5V 0805	C34	1
183	M	0111-3104-5135	C/M Multi 0.1uF 50V Y5V 0805	C35	1
184	M	0111-3104-5135	C/M Multi 0.1uF 50V Y5V 0805	C36	1
185	M	0111-3104-5135	C/M Multi 0.1uF 50V Y5V 0805	C37	1
186	M	0111-3104-5135	C/M Multi 0.1uF 50V Y5V 0805	C38	1
187	M	0111-3104-5135	C/M Multi 0.1uF 50V Y5V 0805	C39	1
188	M	0101-1220-1204	E/C GEN. 22uF 16V RV2 SMD	C4	1
189	M	0111-3104-5135	C/M Multi 0.1uF 50V Y5V 0805	C40	1
190	M	0111-3104-5135	C/M Multi 0.1uF 50V Y5V 0805	C41	1
191	M	0111-3104-5135	C/M Multi 0.1uF 50V Y5V 0805	C42	1

Confidential - Do Not Copy

COMPLETE PARTS LIST

MODULE NO. 3180-0052-0150 LCD MAIN BD ASS'Y (VG181)					
NO	M/S	PART NO	DESCRIPTION	LOC	Q'TY
192	M	0111-3104-5135	C/M Multi 0.1uF 50V Y5V 0805	C43	1
193	M	0111-3104-5135	C/M Multi 0.1uF 50V Y5V 0805	C44	1
194	M	0111-3104-5135	C/M Multi 0.1uF 50V Y5V 0805	C45	1
195	M	0111-3104-5135	C/M Multi 0.1uF 50V Y5V 0805	C46	1
196	M	0111-3104-5135	C/M Multi 0.1uF 50V Y5V 0805	C47	1
197	M	0111-3473-5115	C/M Multi 0.047uF 50V X7R 0805	C48	1
198	M	0111-3104-5135	C/M Multi 0.1uF 50V Y5V 0805	C49	1
199	M	0101-1220-1204	E/C GEN. 22uF 16V RV2 SMD	C5	1
200	M	0111-3104-5135	C/M Multi 0.1uF 50V Y5V 0805	C50	1
201	M	0111-3104-5135	C/M Multi 0.1uF 50V Y5V 0805	C51	1
202	M	0111-3104-5135	C/M Multi 0.1uF 50V Y5V 0805	C52	1
203	M	0111-3104-5135	C/M Multi 0.1uF 50V Y5V 0805	C53	1
204	M	0111-3104-5135	C/M Multi 0.1uF 50V Y5V 0805	C54	1
205	M	0101-1220-1204	E/C GEN. 22uF 16V RV2 SMD	C6	1
206	M	0101-1220-1204	E/C GEN. 22uF 16V RV2 SMD	C7	1
207	M	0101-1331-1211	E/C GEN. 330uF 16V 105' F	C75	1
208	M	0101-1331-1211	E/C GEN. 330uF 16V 105' F	C76	1
209	M	0101-1331-1211	E/C GEN. 330uF 16V 105' F	C77	1
210	M	0111-3104-5135	C/M Multi 0.1uF 50V Y5V 0805	C78	1
211	M	0101-1331-1104	E/C GEN. 330uF 10V 8D 85' SMD	C79	1
212	M	0111-3104-5135	C/M Multi 0.1uF 50V Y5V 0805	C8	1
213	M	0111-3470-5105	C/M Multi 47PF 50V NPO 0805	C80	1
214	M	0111-3104-5135	C/M Multi 0.1uF 50V Y5V 0805	C81	1
215	M	0111-3104-5135	C/M Multi 0.1uF 50V Y5V 0805	C82	1
216	M	0111-3104-5135	C/M Multi 0.1uF 50V Y5V 0805	C83	1
217	M	0111-3104-5135	C/M Multi 0.1uF 50V Y5V 0805	C84	1
218	M	0111-3104-5135	C/M Multi 0.1uF 50V Y5V 0805	C85	1
219	M	0111-3104-5135	C/M Multi 0.1uF 50V Y5V 0805	C86	1
220	M	0111-3104-5135	C/M Multi 0.1uF 50V Y5V 0805	C87	1
221	M	0101-1220-1204	E/C GEN. 22uF 16V RV2 SMD	C88	1
222	M	0111-3104-5135	C/M Multi 0.1uF 50V Y5V 0805	C89	1

Confidential - Do Not Copy

COMPLETE PARTS LIST

MODULE NO. 3180-0052-0150 LCD MAIN BD ASS'Y (VG181)					
NO	M/S	PART NO	DESCRIPTION	LOC	Q'TY
223	M	0111-3104-5135	C/M Multi 0.1uF 50V Y5V 0805	C9	1
224	M	0111-3104-5135	C/M Multi 0.1uF 50V Y5V 0805	C90	1
225	M	0111-3104-5135	C/M Multi 0.1uF 50V Y5V 0805	C91	1
226	M	0111-3104-5135	C/M Multi 0.1uF 50V Y5V 0805	C92	1
227	M	0111-3104-5135	C/M Multi 0.1uF 50V Y5V 0805	C93	1
228	M	0111-3104-5135	C/M Multi 0.1uF 50V Y5V 0805	C94	1
229	M	0111-3104-5135	C/M Multi 0.1uF 50V Y5V 0805	C95	1
230	M	0111-3104-5135	C/M Multi 0.1uF 50V Y5V 0805	C96	1
231	M	0111-3104-5135	C/M Multi 0.1uF 50V Y5V 0805	C97	1
232	M	0101-1220-1204	E/C GEN. 22uF 16V RV2 SMD	C98	1
233	M	0111-3104-5135	C/M Multi 0.1uF 50V Y5V 0805	C99	1
234	M	0390-5000-1053	GEN. DIODE 1N4148 SMD	D08	1
235	M	0390-5001-9203	Dual Surface Diode BAV99 SMD (SOT-23)	D1	1
236	M	0390-5000-1053	GEN. DIODE 1N4148 SMD	D10	1
237	M	0390-5000-5202	GEN. DIODE 1N4001F T	D11	1
238	M	0390-5000-1053	GEN. DIODE 1N4148 SMD	D13	1
239	M	0390-3000-5012	FAST DIODE 30DF2 T	D15	1
240	M	0390-5000-1053	GEN. DIODE 1N4148 SMD	D17	1
241	M	0390-5000-1053	GEN. DIODE 1N4148 SMD	D18	1
242	M	0390-5000-1053	GEN. DIODE 1N4148 SMD	D19	1
243	M	0390-5001-9203	Dual Surface Diode BAV99 SMD (SOT-23)	D2	1
244	M	0390-5000-1053	GEN. DIODE 1N4148 SMD	D20	1
245	M	0390-5001-9203	Dual Surface Diode BAV99 SMD (SOT-23)	D3	1
246	M	0390-5001-9203	Dual Surface Diode BAV99 SMD (SOT-23)	D4	1
247	M	0390-5001-9203	Dual Surface Diode BAV99 SMD (SOT-23)	D5	1
248	M	0390-5001-9203	Dual Surface Diode BAV99 SMD (SOT-23)	D6	1
249	M	0390-5001-9203	Dual Surface Diode BAV99 SMD (SOT-23)	D7	1
250	M	0230-2508-0000	JUMPER WIRE 2.5*0.6mm	J4	1
251	M	0451-2000-0864	WAFER 2.00mm 8P 90' Kink	J5	1
252	M	0302-2000-0301	Conn. Male R/A 30P SMD (DF14-30P-1.25H)	J6	1
253	M	0302-1130-0043	DC POWER JACK 4P 13 7.5A	J8	1

Confidential - Do Not Copy

COMPLETE PARTS LIST

MODULE NO. 3180-0052-0150 LCD MAIN BD ASS'Y (VG181)					
NO	M/S	PART NO	DESCRIPTION	LOC	Q'TY
254	M	0451-2000-0904	WAFER 2.00mm 9P 180'Kink	JP4	1
255	M	0451-2000-0464	WAFER 2.00mm 4P 90' Kink	JP6	1
256	M	0130-0508-1859	RES. CF 0.5ohm 1/8W J 1206	L1	1
257	M	0370-0000-4651	Chip Bead Core 80ohm MLB321611-0080P-N	L10	1
258	M	0130-0508-1859	RES. CF 0.5ohm 1/8W J 1206	L11	1
259	M	0130-0508-1859	RES. CF 0.5ohm 1/8W J 1206	L12	1
260	M	0130-1809-1859	RES. CF 18ohm 1/8W J 1206	L13	1
261	M	0130-0000-1858	RES. CF 0.0ohm 1/8W J 0805	L14	1
262	M	0130-0000-1858	RES. CF 0.0ohm 1/8W J 0805	L16	1
263	M	0370-0000-1010	FERRITE CORE RH 3.5x6x1.0(W)x2	L17	1
264	M	0130-0000-1859	RES. CF 0.0ohm 1/8W J 1206	L18	1
265	M	0370-0000-1010	FERRITE CORE RH 3.5x6x1.0(W)x2	L19	1
266	M	0130-0508-1859	RES. CF 0.5ohm 1/8W J 1206	L2	1
267	M	0370-0000-4752	Chip Bead Core 40ohm MLB201209-0040P-N	L20	1
268	M	0370-0000-4752	Chip Bead Core 40ohm MLB201209-0040P-N	L21	1
269	M	0370-0000-4752	Chip Bead Core 40ohm MLB201209-0040P-N	L22	1
270	M	0361-1000-0060	CHOKE COIL L:160uH 1A	L23	1
271	M	0130-0508-1859	RES. CF 0.5ohm 1/8W J 1206	L24	1
272	M	0130-0508-1859	RES. CF 0.5ohm 1/8W J 1206	L25	1
273	M	0230-5008-0000	JUMPER WIRE 5.0*0.6mm	L26	1
274	M	0130-0508-1859	RES. CF 0.5ohm 1/8W J 1206	L3	1
275	M	0370-0000-4752	Chip Bead Core 40ohm MLB201209-0040P-N	L31	1
276	M	0370-0000-4752	Chip Bead Core 40ohm MLB201209-0040P-N	L32	1
277	M	0130-0508-1859	RES. CF 0.5ohm 1/8W J 1206	L4	1
278	M	0370-0000-3552	Chip Bead Core 30ohm MLB201209-0030A-N1	L5	1
279	M	0370-0000-3552	Chip Bead Core 30ohm MLB201209-0030A-N1	L6	1
280	M	0370-0000-3552	Chip Bead Core 30ohm MLB201209-0030A-N1	L7	1
281	M	0302-3010-0240	DVI CONN. R/A 24PIN (DV2R024N11)	P1	1
282	M	0300-1200-3150	D-SUB Female 90' 15P 3ROW	P2	1
283	M	0171-2242-0302	PCB MAIN BD 200*150*1.6t FR4 6M	PCB01	1
284	M	0141-2209-3851	ARRAY RES. A(X) 22ohm 4R J 8P	PR1	1

Confidential - Do Not Copy

COMPLETE PARTS LIST

MODULE NO. 3180-0052-0150 LCD MAIN BD ASS'Y **(VG181)**					
NO	M/S	PART NO	DESCRIPTION	LOC	Q'TY
285	M	0141-2209-3851	ARRAY RES. A(X) 22ohm 4R J 8P	PR10	1
286	M	0141-2209-3851	ARRAY RES. A(X) 22ohm 4R J 8P	PR11	1
287	M	0141-2209-3851	ARRAY RES. A(X) 22ohm 4R J 8P	PR12	1
288	M	0141-2209-3851	ARRAY RES. A(X) 22ohm 4R J 8P	PR17	1
289	M	0141-2209-3851	ARRAY RES. A(X) 22ohm 4R J 8P	PR18	1
290	M	0141-2209-3851	ARRAY RES. A(X) 22ohm 4R J 8P	PR19	1
291	M	0141-2209-3851	ARRAY RES. A(X) 22ohm 4R J 8P	PR2	1
292	M	0141-2209-3851	ARRAY RES. A(X) 22ohm 4R J 8P	PR20	1
293	M	0141-2209-3851	ARRAY RES. A(X) 22ohm 4R J 8P	PR21	1
294	M	0141-2209-3851	ARRAY RES. A(X) 22ohm 4R J 8P	PR22	1
295	M	0141-2209-3851	ARRAY RES. A(X) 22ohm 4R J 8P	PR23	1
296	M	0141-2209-3851	ARRAY RES. A(X) 22ohm 4R J 8P	PR24	1
297	M	0141-2209-3851	ARRAY RES. A(X) 22ohm 4R J 8P	PR25	1
298	M	0141-2209-3851	ARRAY RES. A(X) 22ohm 4R J 8P	PR26	1
299	M	0141-2209-3851	ARRAY RES. A(X) 22ohm 4R J 8P	PR27	1
300	M	0141-2209-3851	ARRAY RES. A(X) 22ohm 4R J 8P	PR28	1
301	M	0141-2209-3851	ARRAY RES. A(X) 22ohm 4R J 8P	PR29	1
302	M	0141-2209-3851	ARRAY RES. A(X) 22ohm 4R J 8P	PR3	1
303	M	0141-2209-3851	ARRAY RES. A(X) 22ohm 4R J 8P	PR30	1
304	M	0141-2209-3851	ARRAY RES. A(X) 22ohm 4R J 8P	PR31	1
305	M	0141-2209-3851	ARRAY RES. A(X) 22ohm 4R J 8P	PR32	1
306	M	0141-2209-3851	ARRAY RES. A(X) 22ohm 4R J 8P	PR33	1
307	M	0141-2209-3851	ARRAY RES. A(X) 22ohm 4R J 8P	PR34	1
308	M	0141-2209-3851	ARRAY RES. A(X) 22ohm 4R J 8P	PR35	1
309	M	0141-2209-3851	ARRAY RES. A(X) 22ohm 4R J 8P	PR36	1
310	M	0141-2209-3851	ARRAY RES. A(X) 22ohm 4R J 8P	PR37	1
311	M	0141-2209-3851	ARRAY RES. A(X) 22ohm 4R J 8P	PR38	1
312	M	0141-2209-3851	ARRAY RES. A(X) 22ohm 4R J 8P	PR39	1
313	M	0141-2209-3851	ARRAY RES. A(X) 22ohm 4R J 8P	PR4	1
314	M	0141-2209-3851	ARRAY RES. A(X) 22ohm 4R J 8P	PR40	1
315	M	0141-2209-3851	ARRAY RES. A(X) 22ohm 4R J 8P	PR41	1

Confidential - Do Not Copy

COMPLETE PARTS LIST

MODULE NO. 3180-0052-0150 LCD MAIN BD ASS'Y (VG181)					
NO	M/S	PART NO	DESCRIPTION	LOC	Q'TY
316	M	0141-2209-3851	ARRAY RES. A(X) 22ohm 4R J 8P	PR42	1
317	M	0141-1009-3851	ARRAY RES. A(X) 10ohm 4R J 8P	PR43	1
318	M	0141-1009-3851	ARRAY RES. A(X) 10ohm 4R J 8P	PR44	1
319	M	0141-4709-3851	ARRAY RES. A(X) 47ohm 4R J 8P	PR46	1
320	M	0141-4701-3851	ARRAY RES. A(X) 4.7Kohm 4R J 8P	PR48	1
321	M	0141-2209-3851	ARRAY RES. A(X) 22ohm 4R J 8P	PR5	1
322	M	0141-2209-3851	ARRAY RES. A(X) 22ohm 4R J 8P	PR6	1
323	M	0141-2209-3851	ARRAY RES. A(X) 22ohm 4R J 8P	PR7	1
324	M	0141-2209-3851	ARRAY RES. A(X) 22ohm 4R J 8P	PR8	1
325	M	0141-2209-3851	ARRAY RES. A(X) 22ohm 4R J 8P	PR9	1
326	M	0410-5000-1610	TRANSISTOR MMBT3904LT1 SMD T	Q1	1
327	M	0410-5000-2610	TRANSISTOR MMBT3906LT1 SMD	Q10	1
328	M	0410-5000-1610	TRANSISTOR MMBT3904LT1 SMD T	Q12	1
329	M	0410-5000-1610	TRANSISTOR MMBT3904LT1 SMD T	Q13	1
330	M	0410-5000-2610	TRANSISTOR MMBT3906LT1 SMD	Q14	1
331	M	0410-5000-1610	TRANSISTOR MMBT3904LT1 SMD T	Q2	1
332	M	0410-5000-1610	TRANSISTOR MMBT3904LT1 SMD T	Q4	1
333	M	0410-5000-2610	TRANSISTOR MMBT3906LT1 SMD	Q5	1
334	M	0410-5000-1610	TRANSISTOR MMBT3904LT1 SMD T	Q6	1
335	M	0410-5000-1610	TRANSISTOR MMBT3904LT1 SMD T	Q7	1
336	M	0410-5000-1610	TRANSISTOR MMBT3904LT1 SMD T	Q8	1
337	M	0410-5000-1610	TRANSISTOR MMBT3904LT1 SMD T	Q9	1
338	M	0130-1002-1858	RES. CF 10Kohm 1/8W J 0805	R1	1
339	M	0130-1002-1858	RES. CF 10Kohm 1/8W J 0805	R10	1
340	M	0130-4701-1858	RES. CF 4.7Kohm 1/8W J 0805	R100	1
341	M	0130-1002-1858	RES. CF 10Kohm 1/8W J 0805	R101	1
342	M	0130-2202-1858	RES. CF 22Kohm 1/8W J 0805	R102	1
343	M	0130-2200-1859	RES. CF 220ohm 1/8W J 1206	R103	1
344	M	0130-2200-1859	RES. CF 220ohm 1/8W J 1206	R104	1
345	M	0130-1002-1858	RES. CF 10Kohm 1/8W J 0805	R105	1
346	M	0111-3104-5135	C/M Multi 0.1uF 50V Y5V 0805	R106	1

Confidential - Do Not Copy

COMPLETE PARTS LIST

MODULE NO. 3180-0052-0150 LCD MAIN BD ASS'Y (**VG181**)					
NO	M/S	PART NO	DESCRIPTION	LOC	Q'TY
347	M	0130-2201-1858	RES. CF 2.2Kohm 1/8W J 0805	R107	1
348	M	0130-2201-1858	RES. CF 2.2Kohm 1/8W J 0805	R108	1
349	M	0130-1002-1858	RES. CF 10Kohm 1/8W J 0805	R109	1
350	M	0130-4709-1858	RES. CF 47ohm 1/8W J 0805	R11	1
351	M	0130-1002-1858	RES. CF 10Kohm 1/8W J 0805	R110	1
352	M	0130-1002-1858	RES. CF 10Kohm 1/8W J 0805	R111	1
353	M	0130-2201-1858	RES. CF 2.2Kohm 1/8W J 0805	R112	1
354	M	0130-4701-1858	RES. CF 4.7Kohm 1/8W J 0805	R113	1
355	M	0130-4701-1858	RES. CF 4.7Kohm 1/8W J 0805	R114	1
356	M	0130-2201-1858	RES. CF 2.2Kohm 1/8W J 0805	R115	1
357	M	0130-1002-1858	RES. CF 10Kohm 1/8W J 0805	R116	1
358	M	0130-4701-1858	RES. CF 4.7Kohm 1/8W J 0805	R117	1
359	M	0130-1002-1858	RES. CF 10Kohm 1/8W J 0805	R118	1
360	M	0130-1001-1858	RES. CF 1.0Kohm 1/8W J 0805	R119	1
361	M	0370-0000-2143	CHIP BEAD CORE 600ohm 1608M T	R12	1
362	M	0130-2202-1858	RES. CF 22Kohm 1/8W J 0805	R120	1
363	M	0130-4702-1858	RES. CF 47Kohm 1/8W J 0805	R121	1
364	M	0370-0000-4833	Chip Bead Core 60ohm (FCM1608K-600T07)	R122	1
365	M	0130-1002-1858	RES. CF 10Kohm 1/8W J 0805	R126	1
366	M	0130-4702-1858	RES. CF 47Kohm 1/8W J 0805	R127	1
367	M	0130-4701-1858	RES. CF 4.7Kohm 1/8W J 0805	R128	1
368	M	0130-4709-1858	RES. CF 47ohm 1/8W J 0805	R13	1
369	M	0130-3301-1858	RES. CF 3.3Kohm 1/8W J 0805	R130	1
370	M	0130-4702-1858	RES. CF 47Kohm 1/8W J 0805	R131	1
371	M	0130-2201-1858	RES. CF 2.2Kohm 1/8W J 0805	R132	1
372	M	0130-1002-1858	RES. CF 10Kohm 1/8W J 0805	R138	1
373	M	0130-1002-1858	RES. CF 10Kohm 1/8W J 0805	R139	1
374	M	0130-3303-1858	RES. CF 330Kohm 1/8W J 0805	R14	1
375	M	0130-3309-1858	RES. CF 33ohm 1/8W J 0805	R140	1
376	M	0130-1002-1858	RES. CF 10Kohm 1/8W J 0805	R141	1
377	M	0130-1203-1858	RES. CF 120Kohm 1/8W J 0805	R142	1

Confidential - Do Not Copy

COMPLETE PARTS LIST

MODULE NO. 3180-0052-0150 LCD MAIN BD ASS'Y (VG181)					
NO	M/S	PART NO	DESCRIPTION	LOC	Q'TY
378	M	0130-1002-1858	RES. CF 10Kohm 1/8W J 0805	R144	1
379	M	0130-1002-1858	RES. CF 10Kohm 1/8W J 0805	R145	1
380	M	0130-2201-1858	RES. CF 2.2Kohm 1/8W J 0805	R146	1
381	M	0130-2209-1858	RES. CF 22ohm 1/8W J 0805	R147	1
382	M	0130-2209-1858	RES. CF 22ohm 1/8W J 0805	R148	1
383	M	0130-1002-1858	RES. CF 10Kohm 1/8W J 0805	R15	1
384	M	0130-1000-1858	RES. CF 100ohm 1/8W J 0805	R150	1
385	M	0130-1002-1858	RES. CF 10Kohm 1/8W J 0805	R151	1
386	M	0130-2209-1858	RES. CF 22ohm 1/8W J 0805	R153	1
387	M	0130-4701-1858	RES. CF 4.7Kohm 1/8W J 0805	R154	1
388	M	0130-1003-1858	RES. CF 100Kohm 1/8W J 0805	R155	1
389	M	0130-2209-1858	RES. CF 22ohm 1/8W J 0805	R16	1
390	M	0130-2209-1858	RES. CF 22ohm 1/8W J 0805	R17	1
391	M	0130-7509-1858	RES. CF 75ohm 1/8W J 0805	R18	1
392	M	0130-7509-1858	RES. CF 75ohm 1/8W J 0805	R19	1
393	M	0130-1002-1858	RES. CF 10Kohm 1/8W J 0805	R2	1
394	M	0130-7509-1858	RES. CF 75ohm 1/8W J 0805	R20	1
395	M	0130-2209-1858	RES. CF 22ohm 1/8W J 0805	R21	1
396	M	0130-1003-1858	RES. CF 100Kohm 1/8W J 0805	R22	1
397	M	0130-1002-1858	RES. CF 10Kohm 1/8W J 0805	R3	1
398	M	0130-1009-1858	RES. CF 10ohm 1/8W J 0805	R38	1
399	M	0130-2201-1858	RES. CF 2.2Kohm 1/8W J 0805	R39	1
400	M	0130-5100-1858	RES. CF 510ohm 1/8W J 0805	R4	1
401	M	0130-2201-1858	RES. CF 2.2Kohm 1/8W J 0805	R41	1
402	M	0130-2201-1858	RES. CF 2.2Kohm 1/8W J 0805	R42	1
403	M	0130-4701-1858	RES. CF 4.7Kohm 1/8W J 0805	R43	1
404	M	0130-1500-1858	RES. CF 150ohm 1/8W J 0805	R44	1
405	M	0130-2201-1858	RES. CF 2.2Kohm 1/8W J 0805	R46	1
406	M	0130-2201-1858	RES. CF 2.2Kohm 1/8W J 0805	R47	1
407	M	0130-2209-1858	RES. CF 22ohm 1/8W J 0805	R49	1
408	M	0130-1002-1858	RES. CF 10Kohm 1/8W J 0805	R5	1

Confidential - Do Not Copy

COMPLETE PARTS LIST

MODULE NO. 3180-0052-0150 LCD MAIN BD ASS'Y **(VG181)**					
NO	M/S	PART NO	DESCRIPTION	LOC	Q'TY
409	M	0130-1500-1858	RES. CF 150ohm 1/8W J 0805	R50	1
410	M	0130-2209-1858	RES. CF 22ohm 1/8W J 0805	R51	1
411	M	0130-2209-1858	RES. CF 22ohm 1/8W J 0805	R56	1
412	M	0130-1001-1858	RES. CF 1.0Kohm 1/8W J 0805	R57	1
413	M	0130-1002-1858	RES. CF 10Kohm 1/8W J 0805	R58	1
414	M	0130-1002-1858	RES. CF 10Kohm 1/8W J 0805	R59	1
415	M	0130-1002-1858	RES. CF 10Kohm 1/8W J 0805	R6	1
416	M	0130-2200-1858	RES. CF 220ohm 1/8W J 0805	R60	1
417	M	0130-2201-1858	RES. CF 2.2Kohm 1/8W J 0805	R61	1
418	M	0130-1002-1858	RES. CF 10Kohm 1/8W J 0805	R62	1
419	M	0130-2201-1858	RES. CF 2.2Kohm 1/8W J 0805	R63	1
420	M	0130-1002-1858	RES. CF 10Kohm 1/8W J 0805	R64	1
421	M	0370-0000-2143	CHIP BEAD CORE 600ohm 1608M T	R65	1
422	M	0130-1009-1858	RES. CF 10ohm 1/8W J 0805	R66	1
423	M	0130-2201-1858	RES. CF 2.2Kohm 1/8W J 0805	R68	1
424	M	0130-1009-1858	RES. CF 10ohm 1/8W J 0805	R69	1
425	M	0130-1002-1858	RES. CF 10Kohm 1/8W J 0805	R7	1
426	M	0130-2201-1858	RES. CF 2.2Kohm 1/8W J 0805	R70	1
427	M	0130-1002-1858	RES. CF 10Kohm 1/8W J 0805	R72	1
428	M	0130-1009-1858	RES. CF 10ohm 1/8W J 0805	R73	1
429	M	0130-1002-1858	RES. CF 10Kohm 1/8W J 0805	R74	1
430	M	0130-4701-1858	RES. CF 4.7Kohm 1/8W J 0805	R75	1
431	M	0130-1000-1858	RES. CF 100ohm 1/8W J 0805	R76	1
432	M	0130-1000-1858	RES. CF 100ohm 1/8W J 0805	R77	1
433	M	0130-3301-1858	RES. CF 3.3Kohm 1/8W J 0805	R78	1
434	M	0130-3301-1858	RES. CF 3.3Kohm 1/8W J 0805	R79	1
435	M	0130-3300-1858	RES. CF 330ohm 1/8W J 0805	R8	1
436	M	0130-3301-1858	RES. CF 3.3Kohm 1/8W J 0805	R80	1
437	M	0130-3301-1858	RES. CF 3.3Kohm 1/8W J 0805	R81	1
438	M	0130-3301-1858	RES. CF 3.3Kohm 1/8W J 0805	R82	1
439	M	0130-3301-1858	RES. CF 3.3Kohm 1/8W J 0805	R83	1

Confidential - Do Not Copy

COMPLETE PARTS LIST

MODULE NO. 3180-0052-0150 LCD MAIN BD ASS'Y (VG181)					
NO	M/S	PART NO	DESCRIPTION	LOC	Q'TY
440	M	0130-2209-1858	RES. CF 22ohm 1/8W J 0805	R84	1
441	M	0130-4701-1858	RES. CF 4.7Kohm 1/8W J 0805	R85	1
442	M	0130-4701-1858	RES. CF 4.7Kohm 1/8W J 0805	R86	1
443	M	0130-1001-1858	RES. CF 1.0Kohm 1/8W J 0805	R87	1
444	M	0130-1001-1858	RES. CF 1.0Kohm 1/8W J 0805	R88	1
445	M	0130-3309-1858	RES. CF 33ohm 1/8W J 0805	R89	1
446	M	0130-3301-1858	RES. CF 3.3Kohm 1/8W J 0805	R9	1
447	M	0130-4701-1858	RES. CF 4.7Kohm 1/8W J 0805	R90	1
448	M	0130-1001-1858	RES. CF 1.0Kohm 1/8W J 0805	R91	1
449	M	0130-1002-1858	RES. CF 10Kohm 1/8W J 0805	R92	1
450	M	0130-8202-1858	RES. CF 82Kohm 1/8W J 0805	R93	1
451	M	0130-1000-1858	RES. CF 100ohm 1/8W J 0805	R94	1
452	M	0130-4702-1858	RES. CF 47Kohm 1/8W J 0805	R95	1
453	M	0130-4701-1858	RES. CF 4.7Kohm 1/8W J 0805	R96	1
454	M	0130-4701-1858	RES. CF 4.7Kohm 1/8W J 0805	R97	1
455	M	0130-2202-1858	RES. CF 22Kohm 1/8W J 0805	R98	1
456	M	0130-2201-1858	RES. CF 2.2Kohm 1/8W J 0805	R99	1
457	M	0430-7004-7738	IC Sil161ACT100 SMD 100PIN (TQFP)	U1	1
458	M	0430-1003-5604	IC 74LCX125MTCX SMD 14PIN (TSSOP)	U10	1
459	M	0430-4006-2028	IC ICS501MT SMD 8PIN (SOIC)	U12	1
460	M	0430-3001-2654	IC MBM29LV400TC-90PFTN SMD 48PIN	U13	1
461	M	0430-3001-6117	IC 24LC16B/P DIP 8PIN	U14	1
462	M	0201-2540-8000	IC SOCKET 2.54mm 8PIN	U14S	1
463	M	0430-5004-9353	IC PW364 TBGA 352PIN	U15	1
464	M	0420-1001-3601	POWER MOS IRF7304 SMD 8PIN	U16	1
465	M	0430-3001-1011	IC AT24C02N-10SC-2.7 SMD 8PIN	U2	1
466	M	0420-1001-3601	POWER MOS IRF7304 SMD 8PIN	U20	1
467	M	0430-0000-2010	IC MC14013BDR2 SMD-14	U21	1
468	M	0420-1001-3601	POWER MOS IRF7304 SMD 8PIN	U23	1
469	M	0420-1001-3601	POWER MOS IRF7304 SMD 8PIN	U25	1
470	M	0430-4000-2004	IC LM339M SMD-14 T	U26	1

Confidential - Do Not Copy

COMPLETE PARTS LIST

MODULE NO. 3180-0052-0150 LCD MAIN BD ASS'Y **(VG181)**					
NO	M/S	PART NO	DESCRIPTION	LOC	Q'TY
471	M	0420-1001-3601	POWER MOS IRF7304 SMD 8PIN	U27	1
472	M	0430-0000-6004	IC CD4049UBM SMD 16PIN	U29	1
473	M	0430-1003-4604	IC 74LCX14MTCX SMD 14PIN (TSSOP)	U30	1
474	M	0430-8000-4604	IC DS90C383AMTD SMD 56PIN (TSSOP)	U32	1
475	M	0430-8000-4604	IC DS90C383AMTD SMD 56PIN (TSSOP)	U33	1
476	M	0430-1003-5604	IC 74LCX125MTCX SMD 14PIN (TSSOP)	U4	1
477	M	0430-4006-2028	IC ICS501MT SMD 8PIN (SOIC)	U7	1
478	M	0430-3000-2017	IC MP24LC21AT/SN SMD 8PIN	U8	1
479	M	0430-8000-3846	IC AD9884AKS-140 SMD 128PIN (MQFP)	U9	1
480	M	0151-2021-1001	SVR M/LAYER/B 2Kohm B 6	VR1	1
481	M	0280-2000-0116	X'TAL 20MHz 49/US 20ppm 20PF 0.5mW	Y3	1
482	M	0280-2000-0116	X'TAL 20MHz 49/US 20ppm 20PF 0.5mW	Y4	1
483	M	0400-1521-2012	ZENER RLZ16B 15.25-16.04V 1/2W SMD	ZD1	1
484	M	0400-1521-2012	ZENER RLZ16B 15.25-16.04V 1/2W SMD	ZD2	1
485	M	0400-0501-2012	ZENER RLZ5.1C 5.09-5.37V 1/2W SMD	ZD3	1
486	M	0400-0501-2012	ZENER RLZ5.1C 5.09-5.37V 1/2W SMD	ZD4	1

Confidential - Do Not Copy

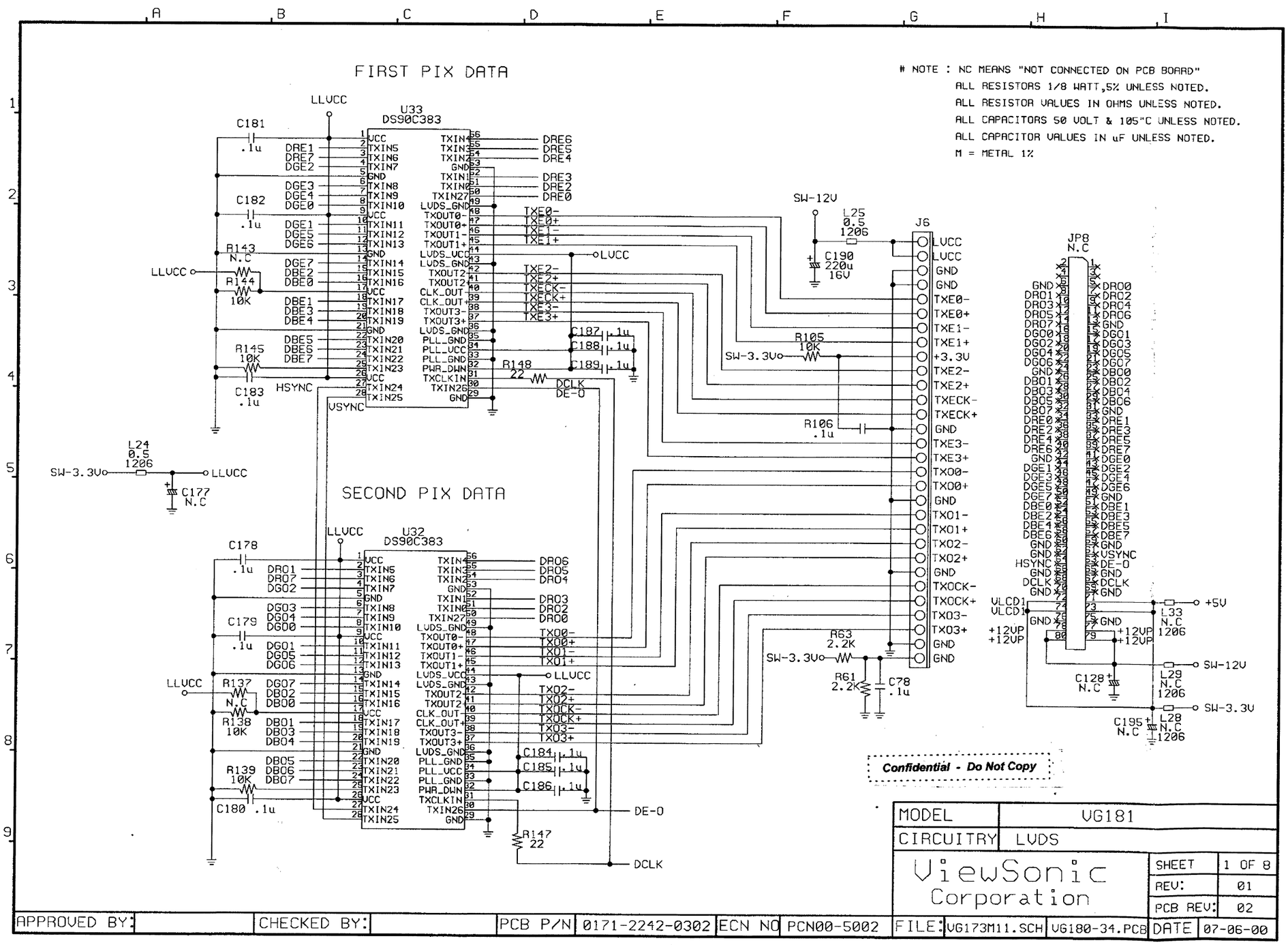

NOTE : NC MEANS "NOT CONNECTED ON PCB BOARD"
ALL RESISTORS 1/8 WATT,5% UNLESS NOTED.
ALL RESISTOR VALUES IN OHMS UNLESS NOTED.
ALL CAPACITORS 50 VOLT & 105"C UNLESS NOTED.
ALL CAPACITOR VALUES IN uF UNLESS NOTED.
M = METAL 1%

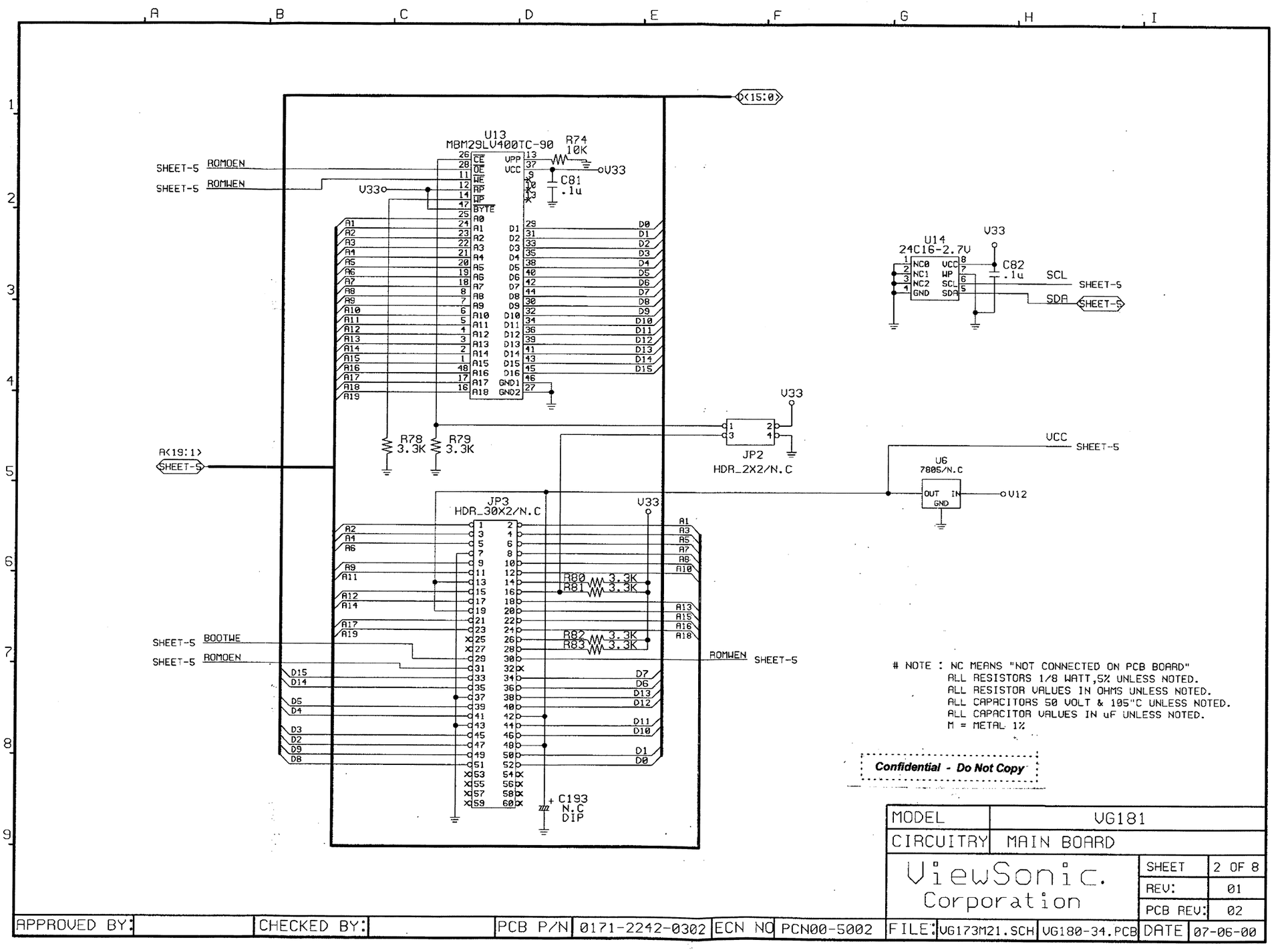
D<15:0>
U13
MBM29LV400TC-90
R74
10K
V33
C81
.1u
SHEET-5 ROMOEN
SHEET-5 ROMWEN
BOOTWE
A<19:1>
R78 3.3K
R79 3.3K
JP2
HDR_2X2/N.C
JP3
HDR_30X2/N.C
R80 3.3K
R81 3.3K
R82 3.3K
R83 3.3K
C193
N.C
DIP
U14
24C16-2.7V
C82
.1u
SCL
SDA
VCC
U6
7805/N.C
OUT IN GND
V12
NOTE : NC MEANS "NOT CONNECTED ON PCB BOARD"
ALL RESISTORS 1/8 WATT,5% UNLESS NOTED.
ALL RESISTOR VALUES IN OHMS UNLESS NOTED.
ALL CAPACITORS 50 VOLT & 105"C UNLESS NOTED.
ALL CAPACITOR VALUES IN uF UNLESS NOTED.
M = METAL 1%
Confidential - Do Not Copy
MODEL VG181
CIRCUITRY MAIN BOARD
ViewSonic. Corporation
SHEET 2 OF 8
REV: 01
PCB REV: 02
APPROVED BY: CHECKED BY: PCB P/N 0171-2242-0302 ECN NO PCN00-5002 FILE: VG173M21.SCH VG180-34.PCB DATE 07-06-00

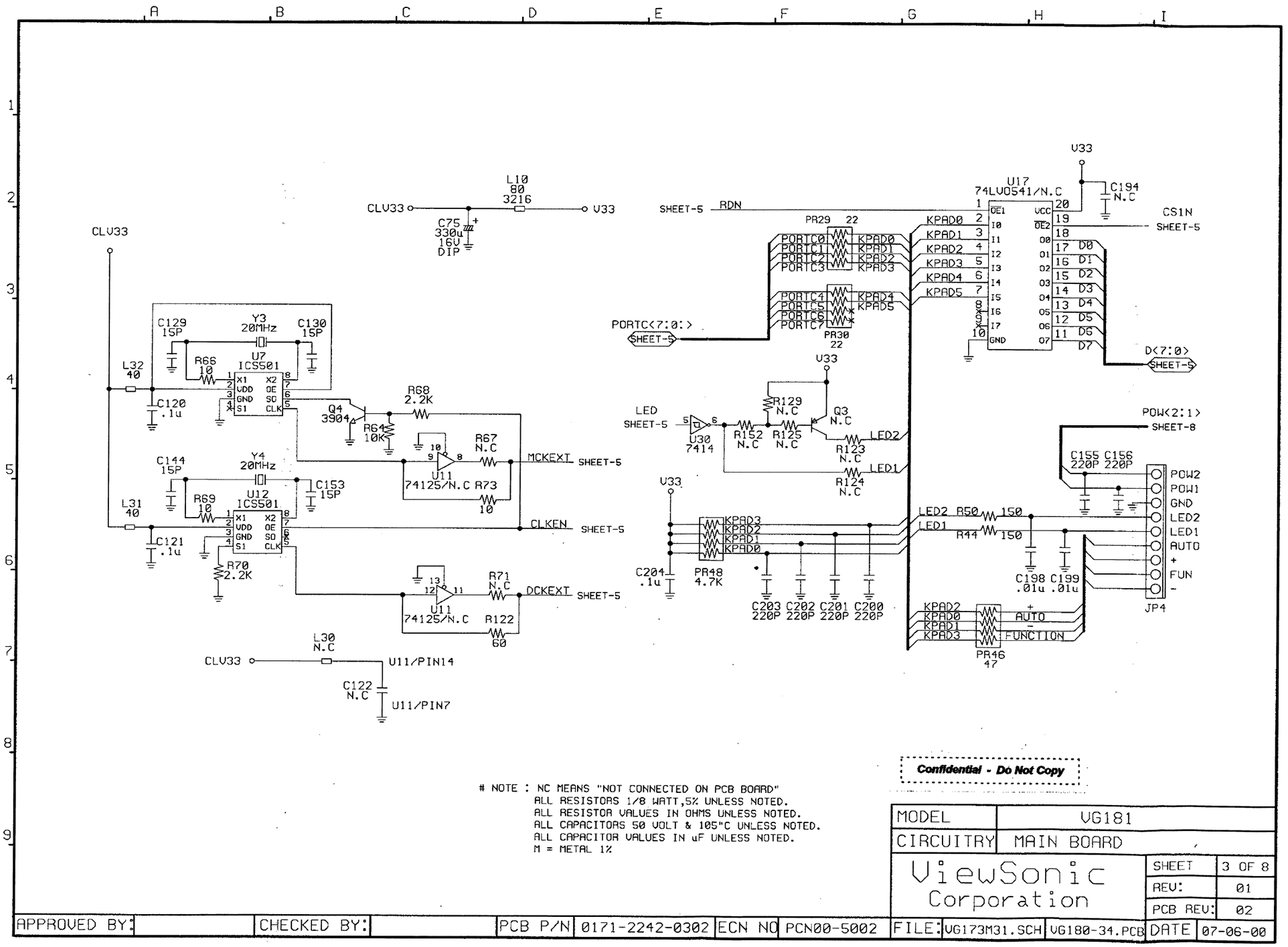

NOTE : NC MEANS "NOT CONNECTED ON PCB BOARD"
ALL RESISTORS 1/8 WATT,5% UNLESS NOTED.
ALL RESISTOR VALUES IN OHMS UNLESS NOTED.
ALL CAPACITORS 50 VOLT & 105"C UNLESS NOTED.
ALL CAPACITOR VALUES IN uF UNLESS NOTED.
M = METAL 1%

Confidential - Do Not Copy

MODEL	VG181
CIRCUITRY	MAIN BOARD
ViewSonic Corporation	SHEET 3 OF 8
	REV: 01
	PCB REV: 02
	DATE 07-06-00

APPROVED BY:		CHECKED BY:		PCB P/N	0171-2242-0302	ECN NO	PCN00-5002	FILE:	VG173M31.SCH	VG180-34.PCB

(ALL COMPONENTS ARE N.C)

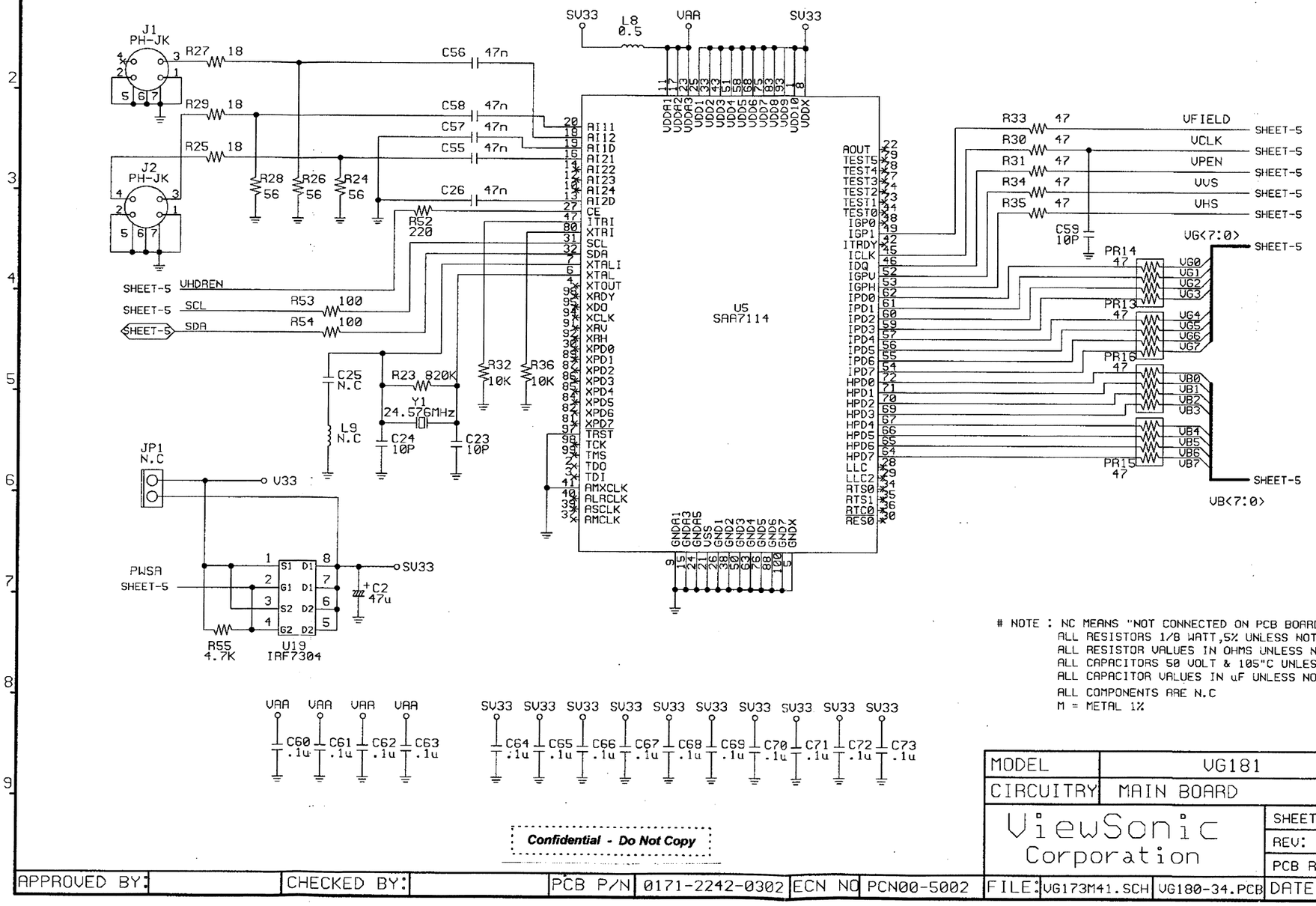

NOTE : NC MEANS "NOT CONNECTED ON PCB BOARD"
ALL RESISTORS 1/8 WATT,5% UNLESS NOTED.
ALL RESISTOR VALUES IN OHMS UNLESS NOTED.
ALL CAPACITORS 50 VOLT & 105°C UNLESS NOTED.
ALL CAPACITOR VALUES IN uF UNLESS NOTED.
ALL COMPONENTS ARE N.C
M = METAL 1%

MODEL	VG181								
CIRCUITRY	MAIN BOARD								
ViewSonic Corporation								SHEET	4 OF 8
								REV:	01
								PCB REV:	02
APPROVED BY:		CHECKED BY:		PCB P/N	0171-2242-0302	ECN NO	PCN00-5002	FILE: VG173M41.SCH	VG180-34.PCB	DATE	07-06-00

Confidential - Do Not Copy

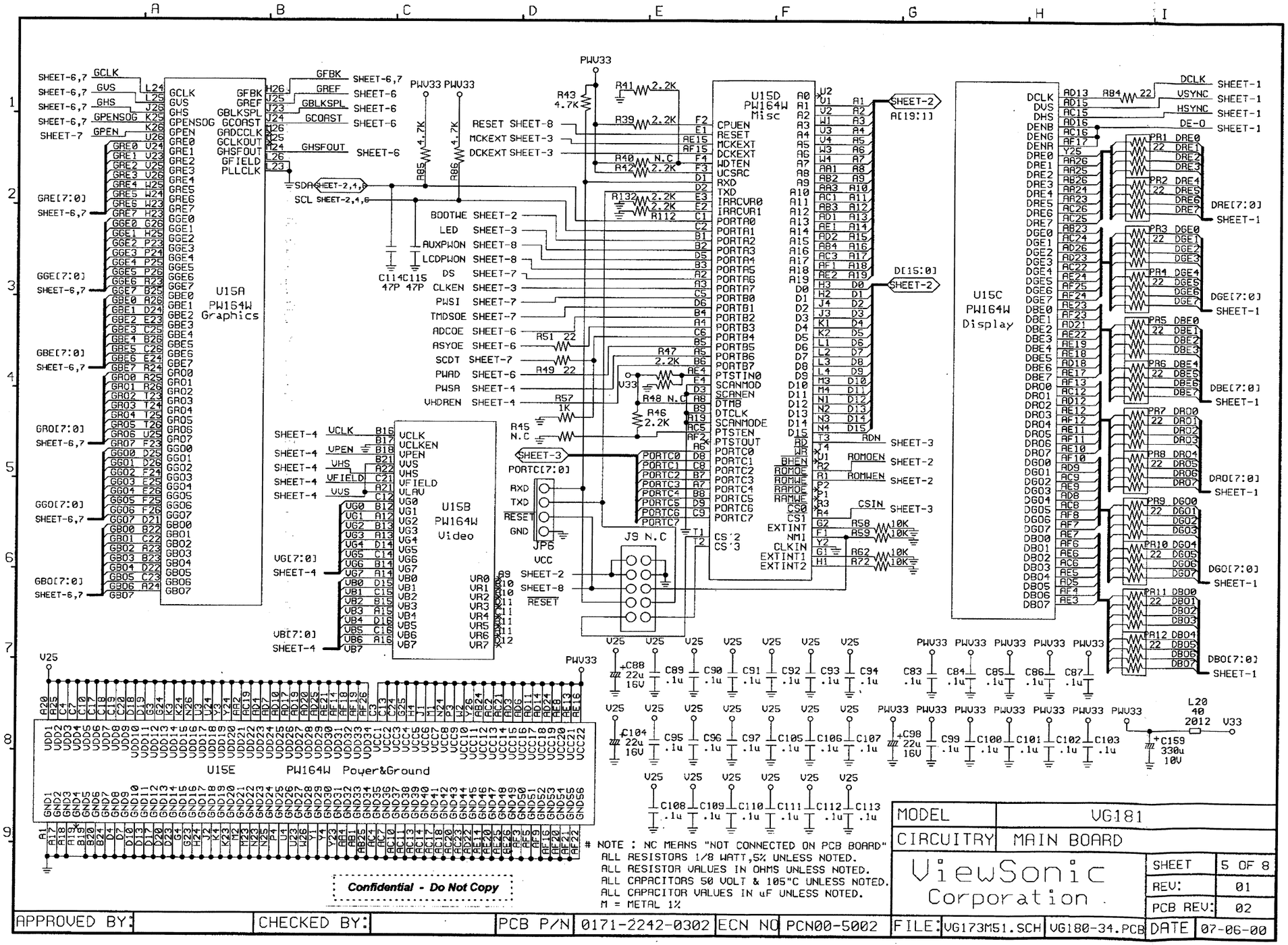

NOTE : NC MEANS "NOT CONNECTED ON PCB BOARD"
ALL RESISTORS 1/8 WATT,5% UNLESS NOTED.
ALL RESISTOR VALUES IN OHMS UNLESS NOTED.
ALL CAPACITORS 50 VOLT & 105"C UNLESS NOTED.
ALL CAPACITOR VALUES IN uF UNLESS NOTED.
M = METAL 1%

APPROVED BY:		CHECKED BY:		PCB P/N	0171-2242-0302	ECN NO	PCN00-5002	FILE:	VG173M51.SCH / VG180-34.PCB

MODEL	VG181
CIRCUITRY	MAIN BOARD
ViewSonic Corporation	
SHEET	5 OF 8
REV:	01
PCB REV:	02
DATE	07-06-00

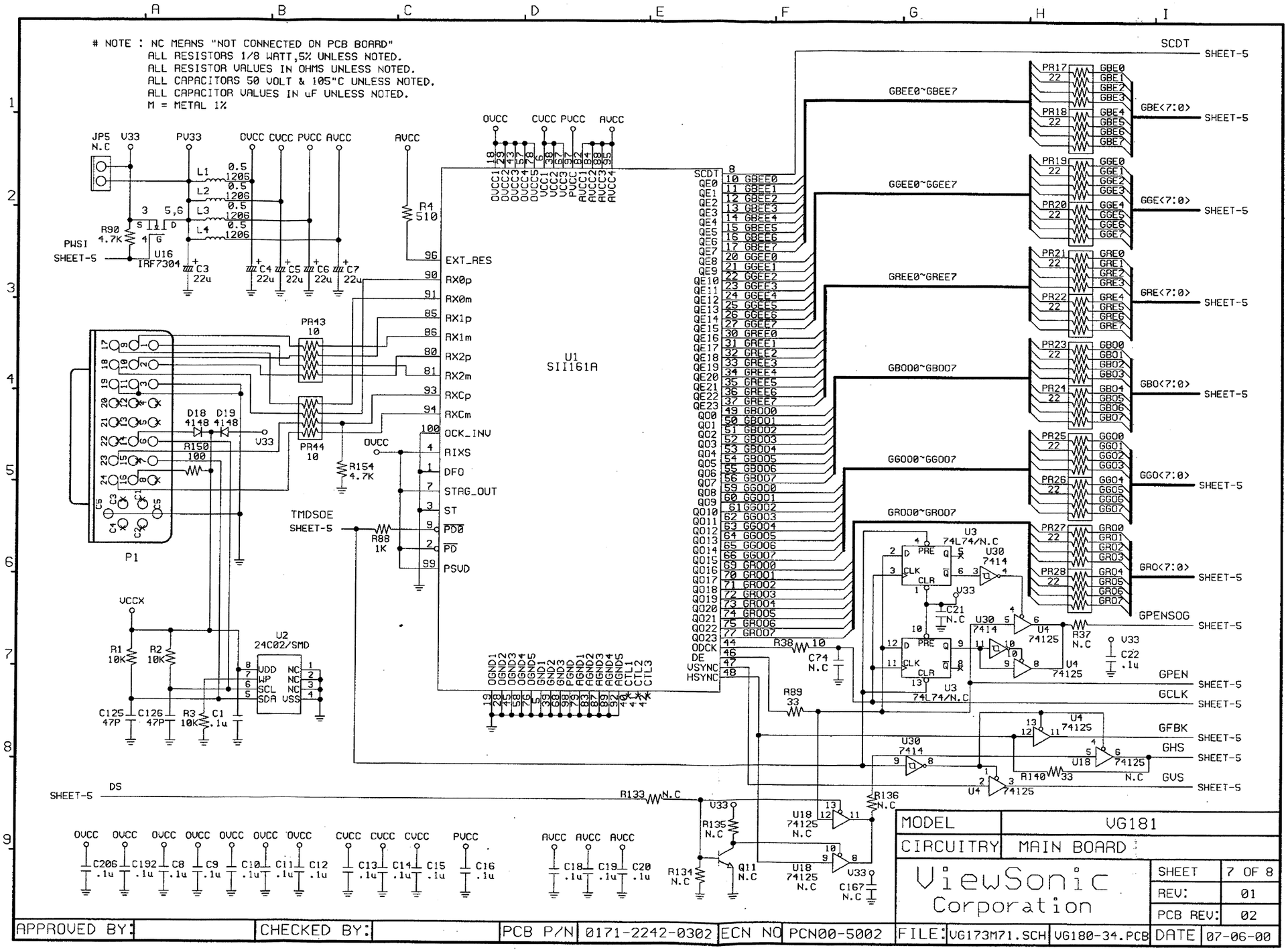

NOTE : NC MEANS "NOT CONNECTED ON PCB BOARD"
ALL RESISTORS 1/8 WATT,5% UNLESS NOTED.
ALL RESISTOR VALUES IN OHMS UNLESS NOTED.
ALL CAPACITORS 50 VOLT & 105"C UNLESS NOTED.
ALL CAPACITOR VALUES IN uF UNLESS NOTED.
M = METAL 1%
U1
SII161A
U2
24C02/SMD
U3
74L74/N.C
U16
IRF7304
P1
SCDT
GBEE0~GBEE7
GGEE0~GGEE7
GREE0~GREE7
GBOO0~GBOO7
GGOO0~GGOO7
GROO0~GROO7
GBE<7:0>
GGE<7:0>
GRE<7:0>
GBO<7:0>
GGO<7:0>
GRO<7:0>
GPENSOG
GPEN
GCLK
GFBK
GHS
GVS
PWSI
TMDSOE
DS
SHEET-5
MODEL
VG181
CIRCUITRY
MAIN BOARD
ViewSonic Corporation
SHEET
7 OF 8
REV:
01
PCB REV:
02
APPROVED BY:
CHECKED BY:
PCB P/N
0171-2242-0302
ECN NO
PCN00-5002
FILE:
VG173M71.SCH
VG180-34.PCB
DATE
07-06-00

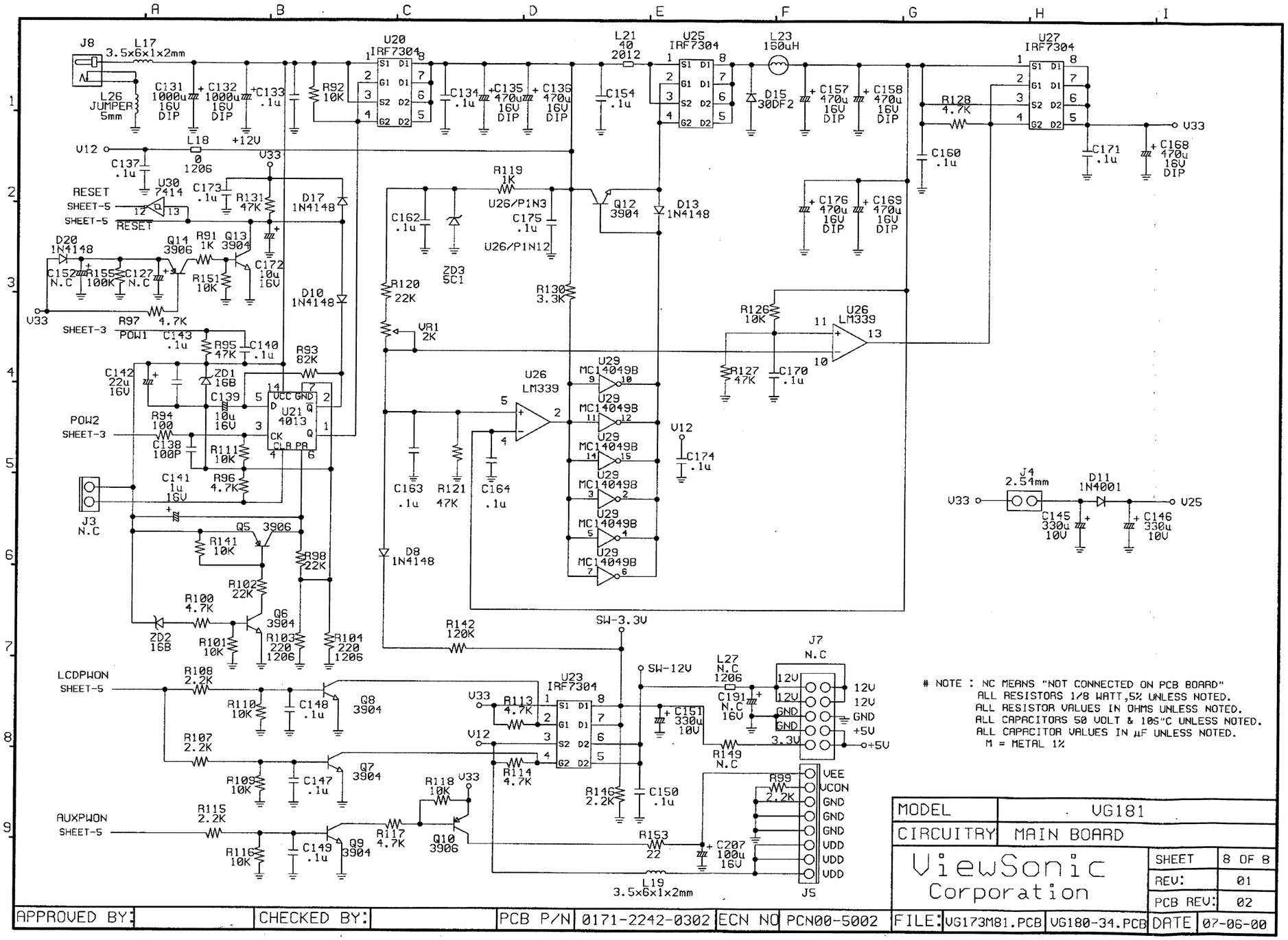

NOTE : NC MEANS "NOT CONNECTED ON PCB BOARD"
ALL RESISTORS 1/8 WATT,5% UNLESS NOTED.
ALL RESISTOR VALUES IN OHMS UNLESS NOTED.
ALL CAPACITORS 50 VOLT & 105"C UNLESS NOTED.
ALL CAPACITOR VALUES IN µF UNLESS NOTED.
M = METAL 1%

APPROVED BY:		CHECKED BY:		PCB P/N	0171-2242-0302	ECN NO	PCN00-5002	FILE:	VG173M81.PCB	VG180-34.PCB	DATE 07-06-00

MODEL	VG181
CIRCUITRY	MAIN BOARD
ViewSonic Corporation	SHEET 8 OF 8
	REV: 01
	PCB REV: 02

Confidential - Do Not Copy

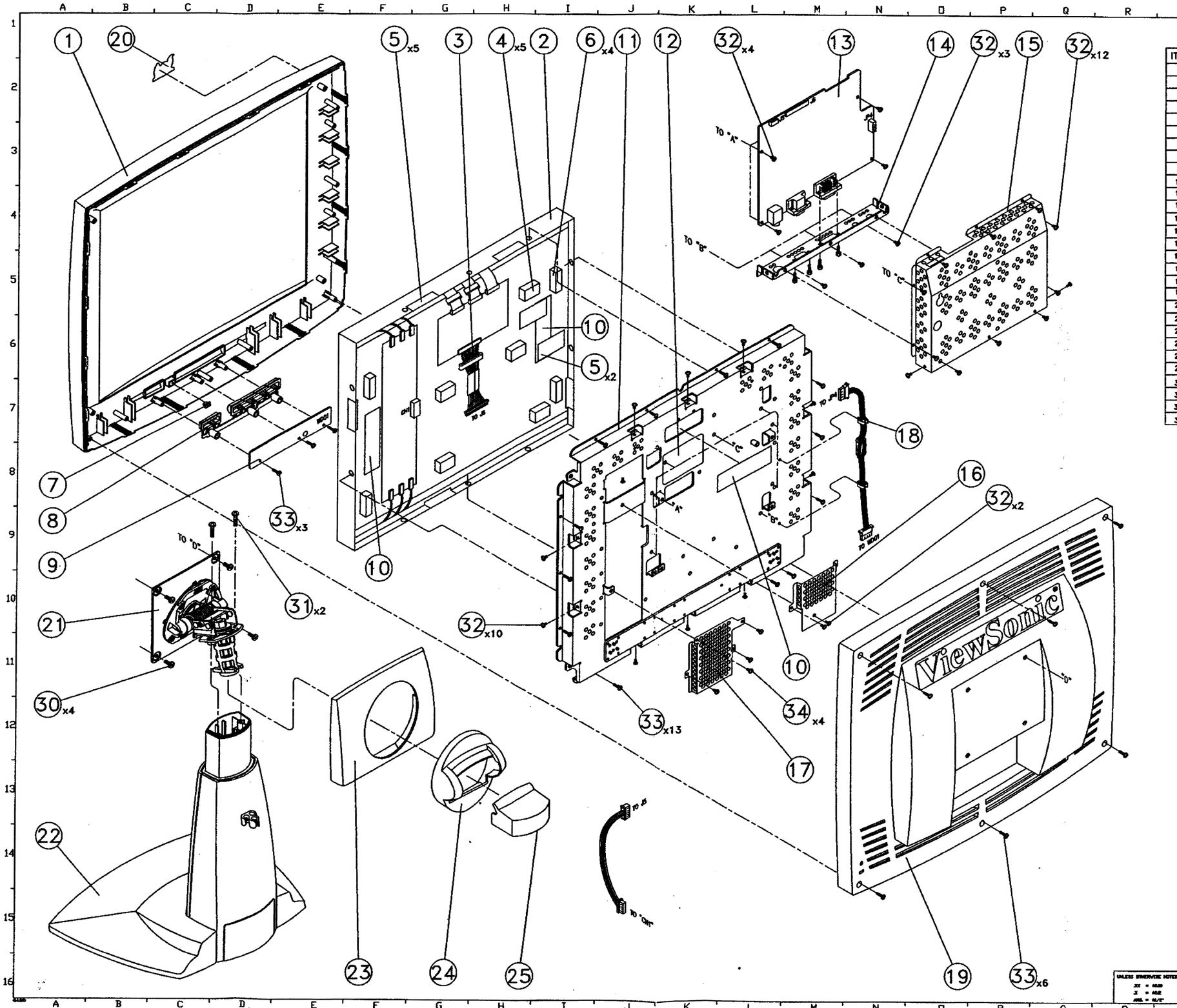

REV.	DESCRIPTION	DSG.	DATE

ITEM	PART NO.	DESCRIPTION	QTY
1	1701-0103-4020	FRONT PANEL CAB.(VG181)	1
2	0211-0181-0469	LCD MODULE 18.1" TFT ITSX94 (IBM)	1
3	0460-3430-0020	WH FI-S30S/DF14-30S157#30 100mm	1
4	1947-1700-0190	GASKET BLOCK (20.0*10.0*10.0)	5
5	1947-1700-0020	SHIELDING AL. TAPE(45.0X25.0)	7
6	1947-1500-0230	SPONGE SPACER(30.0*10.0*10.0)	4
7	1701-0700-0050	LED LENS	1
8	1701-0405-4000	BUTTON (VG181)	1
9	3180-0032-0156	LCD 18" DISPLAY BD ASS'Y (VG181)	1
10	1947-1700-0900	SHIELDING AL. TAPE(90.0X25.0)	3
11	1712-0100-1090	FRAME BRACKET (VG181)	1
12	1701-0900-0020	PC PLATE (70.0*45.0*0.5)	1
13	3180-0052-0150	LCD 18.0"MAIN BD ASS'Y (VG181)	1
14	1712-0100-1110	SUPPORT BKT FOR M/B (VG181)	1
15	1712-0500-0360	SHIELD FOR M/B(VG181)	1
16	1712-0500-0440	SHIELD-B FOR INV.	1
17	1712-0500-0370	SHIELD-A FOR INV.	1
18	1701-1500-0030	WIRE SADDLE (CH-01C)	2
19	3174-0012-0305	REAR COVER CAB.(VSC-18"BLANK)	1
20	1936-1000-0060	V. SONIC LOGO-B (AL PLATE)	1
21	3180-0012-0025	PIVOT PLATE ASS'Y (VG181)	1
22	3180-0012-0014	NECK-BASE ASS'Y (VG181)	1
23	1701-0503-8000	REAR HOUSING HOLDER (VG181)	2
24	1701-0503-7000	REAR HOUSING CAP (VG181)	1
25	1701-0503-6000	SWIVEL CAP (VG181)	1
30	1720-5004-1020	MAC. SCREW-MI M4.0*10.0L,NI	4
31	1721-1004-2010	TAP. SCREW-TP #4.0*20.0L,Zn-Cc	2
32	1720-0003-0410	MAC. SCREW-MB M3.0*4.0L,Zn-Cc	34
33	1721-0003-1020	TAP. SCREW-TB #3.0*10.0L,NI	22

Confidential - Do Not Copy

VG181			2511-3318-0034
DESCRIPTION			PART NO.
		THIRD ANGLE PROJECTION	MODEL No. VG181
UNLESS OTHERWISE NOTED	DSN: Jessie Fu 07/24/99	MATERIAL: ******	DWG. NAME 18" CASE ASS'Y
	CHK:	QTY: 1 SIZE: A1	
	APPR:	SCALE: Full SHEET: NO	DWG. No. VG181-CA REV. 0 SHEET 1 OF 1